THE TERRACE AT SCOTTS VALLEY

APN# 022-162-69 & 74

SCOTTS VALLEY DRIVE
SCOTTS VALLEY, CA 95066

CONTRACTOR RESPONSIBILITY

CONTRACTOR AGREES THAT HE SHOULD ASSUME SOLE AND COMPLETE RESPONSIBILITY FOR JOB SITE CONDITIONS, INCLUDING THE SAFETY OF ALL PERSONS AND PROPERTY, DURING THE COURSE OF CONSTRUCTION OF THIS PROJECT, AND THAT REQUIREMENT SHALL APPLY CONTINUOUSLY AND NOT BE LIMITED DURING WORKING HOURS. THE CONTRACTOR SHALL DEFEND, INDEMNIFY AND HOLD THE OWNER AND THE DESIGN PROFESSIONALS HARMLESS FROM ANY AND ALL LIABILITY, REAL OR ALLEGED, IN CONNECTION WITH THE PERFORMANCE OF WORK ON THIS PROJECT, EXCEPTING FOR LIABILITY ARISING FROM THE SOLE NEGLIGENCE OF THE OWNER OR DESIGN PROFESSIONAL.

DISCREPANCIES

IF THERE ARE ANY DISCREPANCIES BETWEEN THE CONSTRUCTION DOCUMENTS AND EXISTING CONDITIONS WHICH WILL AFFECT THE WORK, THE CONTRACTOR SHALL BRING SUCH DISCREPANCIES TO THE DESIGN PROFESSIONAL FOR ADJUSTMENT BEFORE PROCEEDING WITH THE WORK. THE CONTRACTOR SHALL BE RESPONSIBLE FOR THE PROPER FITTING OF ALL WORK AND FOR THE COORDINATION OF ALL TRADES, SUBCONTRACTORS, AND PERSONS ENGAGED UPON THIS CONTRACT.

EROSION CONTROL NOTE

IT IS THE CONTRACTOR'S RESPONSIBILITY TO PROVIDE AND MAINTAIN EROSION CONTROL MEASURES AS REQUIRED THROUGHOUT THE LIFE OF THE PROJECT IN CONFORMANCE WITH THE CITY OF SCOTTS VALLEY AND THE ASSOCIATION OF BAY AREA GOVERNMENTS

CONTRACTOR TO PROVIDE BACK-UP EROSION PREVENTION MEASURES (SOIL STABILIZATION) WITH SEDIMENT CONTROL MEASURES SUCH AS STRAW WATTLES, SILT FENCE, GRAVEL INLET FILTERS, AND/OR SEDIMENT TRAPS OR BASINS. ENSURE CONTROL MEASURES ARE ADEQUATE, IN PLACE, AND IN OPERABLE CONDITIONS. SEDIMENT CONTROLS, INCLUDING INLET PROTECTION, ARE NECESSARY BUT SHOULD BE A SECONDARY DEFENSE BEHIND GOOD EROSION CONTROL MEASURES.

ALL EROSION PREVENTION AND SEDIMENT CONTROL MEASURES SHALL BE MAINTAINED AND REPAIRED THROUGHOUT THE SEASON. REPLACEMENT SUPPLIES SHOULD BE KEPT ON SITE.

SITE INSPECTIONS SHALL BE CONDUCTED BEFORE AND AFTER EACH STORM EVENT, AND EVERY 24 HOURS FOR EXTENDED STORM EVENTS, TO IDENTIFY AREAS THAT CONTRIBUTE TO EROSION AND SEDIMENT PROBLEMS OR ANY OTHER POLLUTANT DISCHARGES. IF ADDITIONAL MEASURES ARE NEEDED, REVISE THE EROSION CONTROL PLAN AND IMPLEMENT THE MEASURES IMMEDIATELY. DOCUMENT ALL INSPECTION FINDINGS AND ACTIONS TAKEN.

CONTRACTOR SHALL USE BEST MANAGEMENT PRACTICES DURING CONSTRUCTION FOR CONTROL OF STORM WATER RUNOFF (E.G. GRAVEL BAGS AT CATCH BASIN INLETS).

CONSTRUCTION SURVEYING / STAKING

CONTRACTOR IS RESPONSIBLE TO PROVIDE ALL SURVEYING AND OR STAKING BY A LICENSED SURVEYOR FOR ALL CONSTRUCTION PURPOSES.

GENERAL NOTES

NO CHANGE TO THE GRADING PLAN SHALL BE PERMITTED WITHOUT PRIOR APPROVAL BY THE OWNER OR OWNERS REPRESENTATIVES.

CONTRACTOR SHALL VERIFY LOCATIONS, ELEVATIONS AND INVERTS OF EXISTING UTILITY PRIOR TO COMMENCEMENT OF WORK AND SHALL NOTIFY OWNER OR OWNERS REPRESENTATIVES OF VARIANCE FROM THOSE SHOWN ON THE PLANS.

UNDERGROUND FACILITIES AND UTILITIES HAVE BEEN SHOWN BASED ON RECORD DRAWINGS AND VISIBLE EVIDENCE FOUND IN FIELD. NO WARRANTY IS MADE REGARDING THE COMPLETENESS OR ACCURACY OF SUCH INFORMATION. PRIOR TO CONSTRUCTION, DETERMINE THE EXACT LOCATION OF UNDERGROUND FACILITIES AND UTILITIES, AND PRESERVE SAME FROM DAMAGE. PRIOR TO CONSTRUCTION, VERIFY LOCATION AND ELEVATION OF EXISTING UNDERGROUND UTILITIES AT THE CROSSING POINTS WITH PROPOSED UTILITIES. THE CONTRACTOR SHALL NOTIFY THE OWNER OR OWNERS REPRESENTATIVES IF CONDITIONS DIFFER FROM THOSE SHOWN ON THE DRAWINGS AND SHALL NOT BEGIN CONSTRUCTION UNTIL THE CHANGED CONDITION HAS BEEN EVALUATED. CONTACT UNDERGROUND SERVICES ALERT (USA) (1-800-227-2600) TWO (2) WEEKS PRIOR TO DIGGING. REPAIR UNDERGROUND UTILITIES DAMAGED BY CONSTRUCTION OPERATIONS. CONTRACTOR SHALL BE RESPONSIBLE FOR ANY AND ALL DAMAGES ASSOCIATED WITH CONTRACTOR'S FAILURE TO EXACTLY LOCATED AND PRESERVE UNDERGROUND FACILITIES AND UTILITIES.

CONTRACTOR SHALL BE RESPONSIBLE FOR ALL COORDINATION WITH THE APPROPRIATE UTILITY COMPANIES AND/OR AGENCIES TO VERIFY THE EXISTENCE AND/OR LOCATION OF ALL UNDERGROUND UTILITIES PRIOR TO COMMENCEMENT OF WORK. AND SHALL NOTIFY U.S.A. @ (800) 227-2600 AT LEAST 48-HOURS IN ADVANCE OF EXCAVATION.

IF ANY INDICATIONS OF ARCHEOLOGICAL REMIANS ARE ENCOUNTERED DURING GRADING ACTIVITIES FOR ANY DEVELOPMENT WITHIN THE PROJECT SITE, ALL WORK SHALL BE HALTED WITHIN 200 FOOT RADIUS OF THE FIND. OWNER SHALL RETAIN A QUALIFIED ARCHEOLOGIST RETAINED TO DETERMINE THE NATURE OF THE DISCOVERY AND RECOMMEND APPROPRATE EVALUATION PROCEDURES.

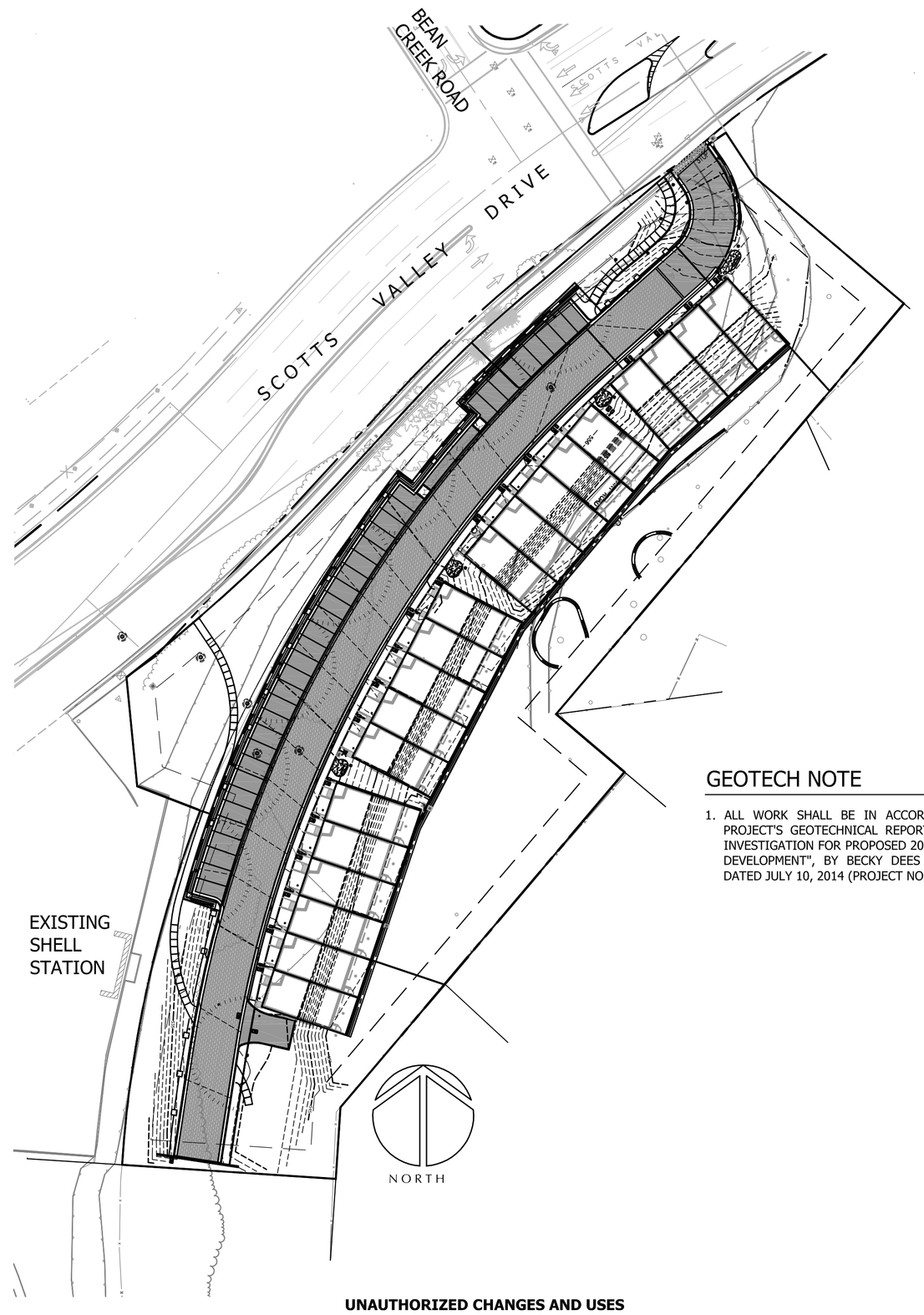

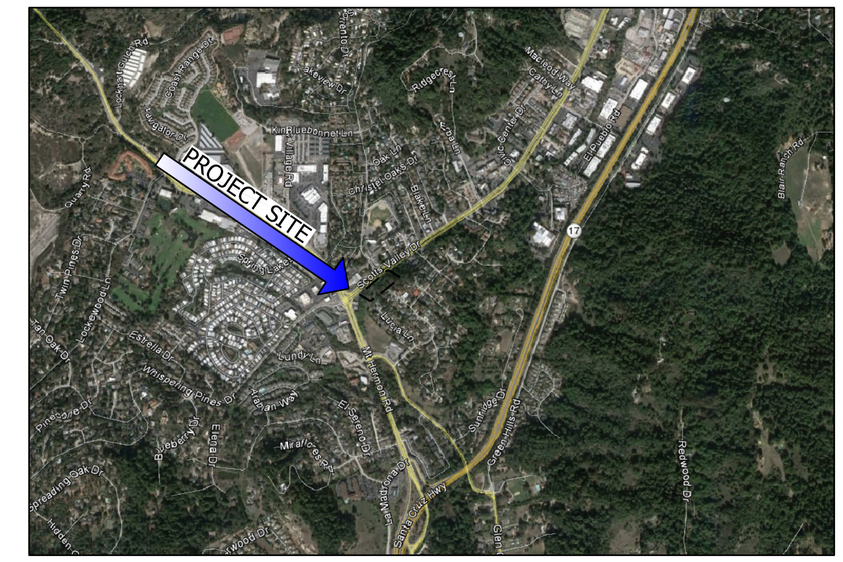

VICINITY MAP
SCALE: NTS

GEOTECH NOTE

1. ALL WORK SHALL BE IN ACCORDANCE WITH THE PROJECT'S GEOTECHNICAL REPORT, "GEOTECHNICAL INVESTIGATION FOR PROPOSED 20 UNIT TOWNHOUSE DEVELOPMENT", BY BECKY DEES AND ASSOCIATES. DATED JULY 10, 2014 (PROJECT NO. SC R-0796)

ABBREVIATIONS

AB	AGGREGATE BASE
AC	ASPHALT CONCRETE
B/SS	BOTTOM OF SANITARY SEWER
BFC	BOTTOM FACE OF CURB
B/STEP	BOTTOM OF STEP
BFW	BOTTOM FACE OF WALL
BW	BACK OF WALL
BFP	BACKFLOW PREVENTER
E	ELECTRICAL (PG&E)
(E)	EXISTING
EP	EDGE OF PAVEMENT
C	AT&T CABLE
CB	CATCH BASIN
FH	FIRE HYDRANT
FG	FINISHED GROUND
G	GAS
GV	GATE VALVE
HYD	HYDRANT
(N)	NEW
OH	OVERHEAD LINES
P	PAVEMENT
POC	POINT OF CONNECTION
REC	RECLAIMED WATER
PE	POLY ETHYLENE TUBING
SAN	SANITARY
SSCO	SANITARY SEWER CLEAN OUT
SD	STORM DRAIN
STA	STATION
T	TELEPHONE
T/REC	TOP OF REC WATER LINE
TC	TOP OF CURB
TOW	TOP OF WALL
T/STEP	TOP OF STEP
SW	TOP OF SIDEWALK
W	WATER
WM	WATER METER
WV	WATER VALVE

LEGEND

PROPOSED	EXISTING	DESCRIPTION
		STORM MANHOLE
		CURB INLET
		DITCH/DROP INLET
		SEWER MANHOLE
		GATE VALVE
		BLOW OFF
		SEWER LATERAL
		WATER SERVICE
		FIRE HYDRANT
		CLEAN OUT
		STORM DRAIN
		SANITARY SEWER
		WATER MAIN
		GAS
		ELECTRICAL
		PROPERTY LINE
		CENTER LINE
		CONTOURS
		VALLEY GUTTER
		RETAINING WALL

CIVIL SHEET INDEX

C0.1 - COVER SHEET
C1.1 - EXISTING AND DEMOLITION PLAN
C2.1 - HORIZONTAL CONTROL AND PAVING PLAN
C2.2 - RETAINING WALL LAYOUT PLAN
C2.3 - LIGHTING PLAN
C2.4 - LIGHTING PLAN
C3.1 - TENTATIVE GRADING PLAN
C3.2 - TENTATIVE STORMWATER CONTROL PLAN
C3.3 - SLOPE ANALYSIS PLAN
C4.1 - TENTATIVE UTILITY PLAN
C5.1 - ACCESS ROAD PROFILE
C5.2 - SITE CROSS SECTIONS
C5.3 - WALL PROFILES
C6.1 - DETAILS
C6.2 - DETAILS
C6.3 - DETAILS
C6.4 - SCOTTS VALLEY WATER STANDARD DETAILS
C7.1 - TENTATIVE MAP
C100 - OFFSITE IMPROVEMENT PLAN
C200 - OFFSITE IMPROVEMENTS EXHIBIT
L1 - PLANTING PLAN

UNAUTHORIZED CHANGES AND USES

CAUTION: THE ENGINEER PREPARING THESE PLANS WILL NOT BE RESPONSIBLE FOR, OR LIABLE FOR, UNAUTHORIZED CHANGES TO OR USES OF THESE PLANS. ALL CHANGES TO THE PLANS MUST BE IN WRITING AND MUST BE APPROVED BY THE PREPARER OF THE PLANS

DEVELOPER:
APPLE HOMES DEVELOPMENT
15 SHERMAN COURT
SCOTTS VALLEY, CA 95066
OFFICE: (831) 464-3380

ARCHITECT:
BILL KEMPF ARCHITECTS
911 CENTER STREET STE. F
SANTA CRUZ, CA 95060
OFFICE: (831) 459-0951

CIVIL ENGINEER:
C2G/CIVIL CONSULTANTS GROUP, INC
4444 SCOTTS VALLEY DRIVE STE. 6
SCOTTS VALLEY, CA 95066
OFFICE: (831) 438-4420

GEOTECHNICAL ENGINEER:
BECKY DEES AND ASSOCIATES
501 MISSION STREET
SANTA CRUZ, CA 95060
OFFICE: (831) 427-1770

LANDSCAPE ARCHITECT:
GREGORY LEWIS LANDSCAPE ARCHITECT
736 PARK WAY
SANTA CRUZ, CA 95065
OFFICE: (831) 425-4747

ARBORIST:
JAMES P. ALLEN
611 MISSION STREET
SANTA CRUZ, CA 95060
OFFICE: (831) 426-6603

REGISTERED PROFESSIONAL ENGINEER
TODD R. CREAMER
No. C 64561
Exp. 6/30/15
CIVIL
STATE OF CALIFORNIA

W:\249-50 PERRI - SV CORN\CAD\MODELS\SV CORNERS BASE.DWG 8.31.2015

REVISIONS	BY
1 CITY COMMENTS 01.21.2015	DD
2 CITY COMMENTS 07.01.2015	DD

COVER SHEET

C2G /CIVIL CONSULTANTS GROUP, INC.
Engineers/Planners
4444 Scotts Valley Drive / Suite 6
Scotts Valley, CA 95066
T (831) 438-4420 F (831) 438-4420

THE TERRACE AT SCOTTS VALLEY
SCOTTS VALLEY, CA
APN: 022-162-69

Date: 09.09.14
Scale: nts
Drawn: DD
Job: 249-50
Sheet: C0.1
Of 18 Sheets

LEGEND

	PROPERTY LINE
	LIMIT OF DISTURBANCE
SD	EXISTING STORM DRAIN
SS	EXISTING SANITARY SEWER
W	EXISTING WATER MAIN
GAS	EXISTING GAS
REC	EXISTING RECLAIMED WATER
	APPROXIMATE EXISTING HEAVY BRUSH LINE
X X X	EXISTING EXISTING RECLAIMED WATER
X575.00	EXISTING SPOT ELEVATION
575	EXISTING CONTOURS
	EXISTING TREE TO BE REMOVED
	POTENTIAL AREAS TO COVER WITH VISQUEEN PRIOR TO COMPACTION

APN 022-162-69

LIMIT OF DISTURBANCE

LIMIT OF DISTURBANCE (TYP)

DIRT ROAD

SCOTTS VALLEY DRIVE

SSMH RIM=540.85 INV=530.80

SDMH RIM=543.33 INV=531.63

SDMH RIM=542.94 INV=537.59

SDMH RIM=530.34 INV=526.24

SDMH RIM=530.27 INV=523.02

SSMH RIM=530.16 INV=519.96

MT. HERMON JUNE BEETLE PRESERVATION NOTES

1. FILL SOIL THAT IS NOT COMPACTED SHALL BE COVERED EACH NIGHT
2. STOCKPILES SHALL BE COVERED AT NIGHT.

NORTH

GRAPHIC SCALE

20 0 10 20 40 80

(IN FEET)
1 inch = 20 ft.

REGISTERED PROFESSIONAL ENGINEER
TODD R. CREAMER
No. C 64561
Exp. 6/30/15
CIVIL
STATE OF CALIFORNIA

W:\249-50 PERRI - SV CORN\CAD\MODELS\SV CORNERS BASE.DWG 8.31.2015

REVISIONS	BY
1 CITY COMMENTS 01.21.2015	DD
2 CITY COMMENTS 07.01.2015	DD

EXISTING SITE & DEMOLITION PLAN

C2G / CIVIL CONSULTANTS GROUP, INC.
Engineers/Planners
4444 Scotts Valley Drive / Suite 6
Scotts Valley, CA 95066
T (831) 438-4420 F (831) 438-4420

THE TERRACE AT SCOTTS VALLEY
SCOTTS VALLEY, CA
APN: 022-162-69

Date: 09.09.14
Scale: 1":20'
Drawn: DD
Job: 249-50
Sheet: C1.1
Of 18 Sheets

SHEET NOTES

1. (N) CONCRETE TYPE "A" CURB & GUTTER (5/C6.1)
2. (N) CONCRETE TYPE "A" CURB & GUTTER (SPILL) (5/C6.1)
3. (N) CONCRETE TYPE "C" VERTICAL CURB (5/C6.1)
4. (N) CONCRETE TYPE "B" CURB & GUTTER (SPILL) (5/C6.1)
5. (N) V9 BOX W/ SUMP (10/C6.3)
6. CURB TRANSITION FROM TYPE "A" CURB & GUTTER TO TYPE "B" (5/C6.1)
7. (N) CONCRETE SIDEWALK
8. (N) PERVIOUS PAVERS (7/C6.1)
9. (N) KEYSTONE BLOCK RETAINING WALL (10/C6.1)
10. (N) POURED IN PLACED RETAINING WALL
11. (N) EXTENDED CURB (TYP. BETWEEN ALL PATIOS)
12. (N) CONCRETE STAIRS AND HANDRAILS
13. (N) ACCESSIBLE CONCRETE RAMPS WITH HANDRAILS
14. (N) INLINE CONCRETE CURB RAMP W/ TRUNCATED DOMES
15. (N) CONCRETE V-DITCH
16. (N) STOP SIGN W/ "RIGHT TURN ONLY" SIGN
17. (N) 40 LF OF DOUBLE YELLOW CENTERLINE STRIPING
18. (N) 1' WIDE STOP BAR STRIPING
19. (N) "STOP" PAVEMENT LETTERING
20. (N) 1' FLUSH CONCRETE BAND
21. "RIGHT TURN ONLY" SIGN
22. (N) "NO THRU STREET" SIGN
23. (N) "ADA ROUTE" SIGN
24. (N) "ADA PARKING" SIGN
25. (N) BENCH
26. REFER TO LANDSCAPE PLAN SHEET L1 FOR ALL PLANTING & IRRIGATION NOTES

LEGEND

- (N) MAIN DRIVE AC PAVEMENT
- (N) LIGHT DUTY AC PAVEMENT
- (N) CONCRETE
- (N) PERVIOUS PAVEMENT
- (N) TYPE "B" CURB & GUTTER
- (N) VERTICAL CURB
- (N) TYPE "A" CURB & GUTTER
- (N) RETAINING WALL
- (N) 6' WOOD FENCE
- (N) DROP INLET
- (N) MANHOLE
- (N) LIGHT FIXTURE
- (N) LOW EMITTING LIGHT FIXTURE
- APPROX. ILLUMINATION RANGE PER FIXTURE

IMPERVIOUS AREA CALCULATIONS

	SQ FT	ACRES
EXISTING	0	0
NEW		
BUILDING/PATIO	21,840	0.501
AC PAVEMENT PARKING	8,107	0.186
CONCRETE SIDEWALK	4,591	0.105
TOTAL INCREASE	34,538	0.792
% OF IMPERVIOUS OF SITE = 39%		

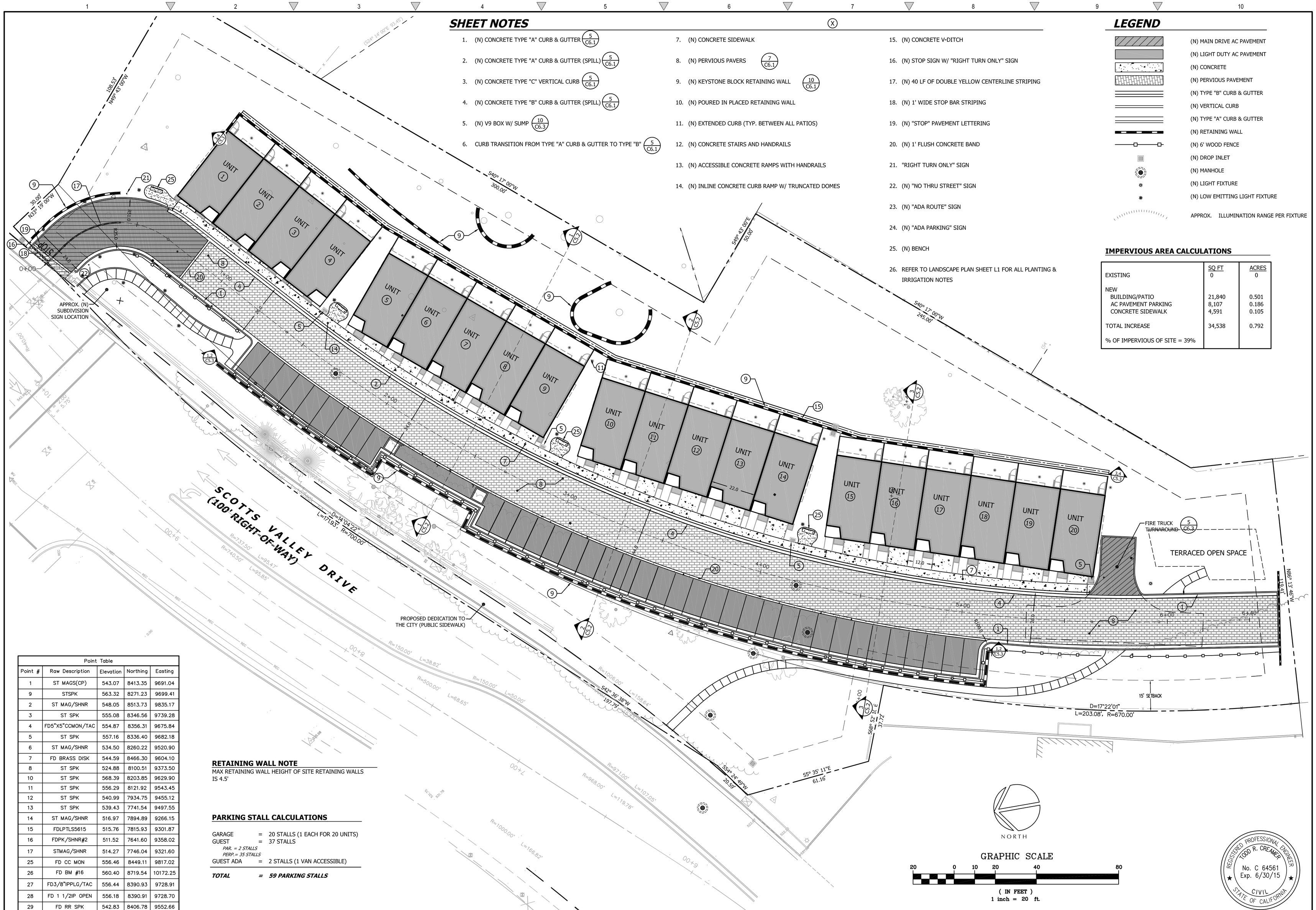

RETAINING WALL NOTE

MAX RETAINING WALL HEIGHT OF SITE RETAINING WALLS IS 4.5'

PARKING STALL CALCULATIONS

GARAGE	=	20 STALLS (1 EACH FOR 20 UNITS)
GUEST	=	37 STALLS
PAR. = 2 STALLS		
PERP.= 35 STALLS		
GUEST ADA	=	2 STALLS (1 VAN ACCESSIBLE)
TOTAL	**=**	***59 PARKING STALLS***

Point Table

Point #	Raw Description	Elevation	Northing	Easting
1	ST MAGS(CP)	543.07	8413.35	9691.04
9	STSPK	563.32	8271.23	9699.41
2	ST MAG/SHNR	548.05	8513.73	9835.17
3	ST SPK	555.08	8346.56	9739.28
4	FD5"X5"CCMON/TAC	554.87	8356.31	9675.84
5	ST SPK	557.16	8336.40	9682.18
6	ST MAG/SHNR	534.50	8260.22	9520.90
7	FD BRASS DISK	544.59	8466.30	9604.10
8	ST SPK	524.88	8100.51	9373.50
10	ST SPK	568.39	8203.85	9629.90
11	ST SPK	556.29	8121.92	9543.45
12	ST SPK	540.99	7934.75	9455.12
13	ST SPK	539.43	7741.54	9497.55
14	ST MAG/SHNR	516.97	7894.89	9266.15
15	FDLPTLS5615	515.76	7815.93	9301.87
16	FDPK/SHNR#2	511.52	7641.60	9358.02
17	STMAG/SHNR	514.27	7746.04	9321.60
25	FD CC MON	556.46	8449.11	9817.02
26	FD BM #16	560.40	8719.54	10172.25
27	FD3/8"IPPLG/TAC	556.44	8390.93	9728.91
28	FD 1 1/2IP OPEN	556.18	8390.91	9728.70
29	FD RR SPK	542.83	8406.78	9552.66

W:\249-50 PERRI - SV CORN\CAD\MODELS\SV CORNERS BASE.DWG 8.31.2015

REVISIONS	BY
1 CITY COMMENTS 01.21.2015	DD
2 CITY COMMENTS 07.01.2015	DD

HORIZONTAL CONTROL & PAVING PLAN

C2G / CIVIL CONSULTANTS GROUP, INC.
Engineers/Planners
444 Airport Blvd. / Suite 6
Santa Cruz, CA 95062
T (831) 438-4420 F (831) 438-4420

THE TERRACE AT SCOTTS VALLEY
SCOTTS VALLEY, CA
APN: 022-162-69

Date: 09.09.14
Scale: 1": 20'
Drawn: DD
Job: 249-50
Sheet: C2.1
Of 18 Sheets

REGISTERED PROFESSIONAL ENGINEER
TODD R. CREAMER
No. C 64561
Exp. 6/30/15
CIVIL
STATE OF CALIFORNIA

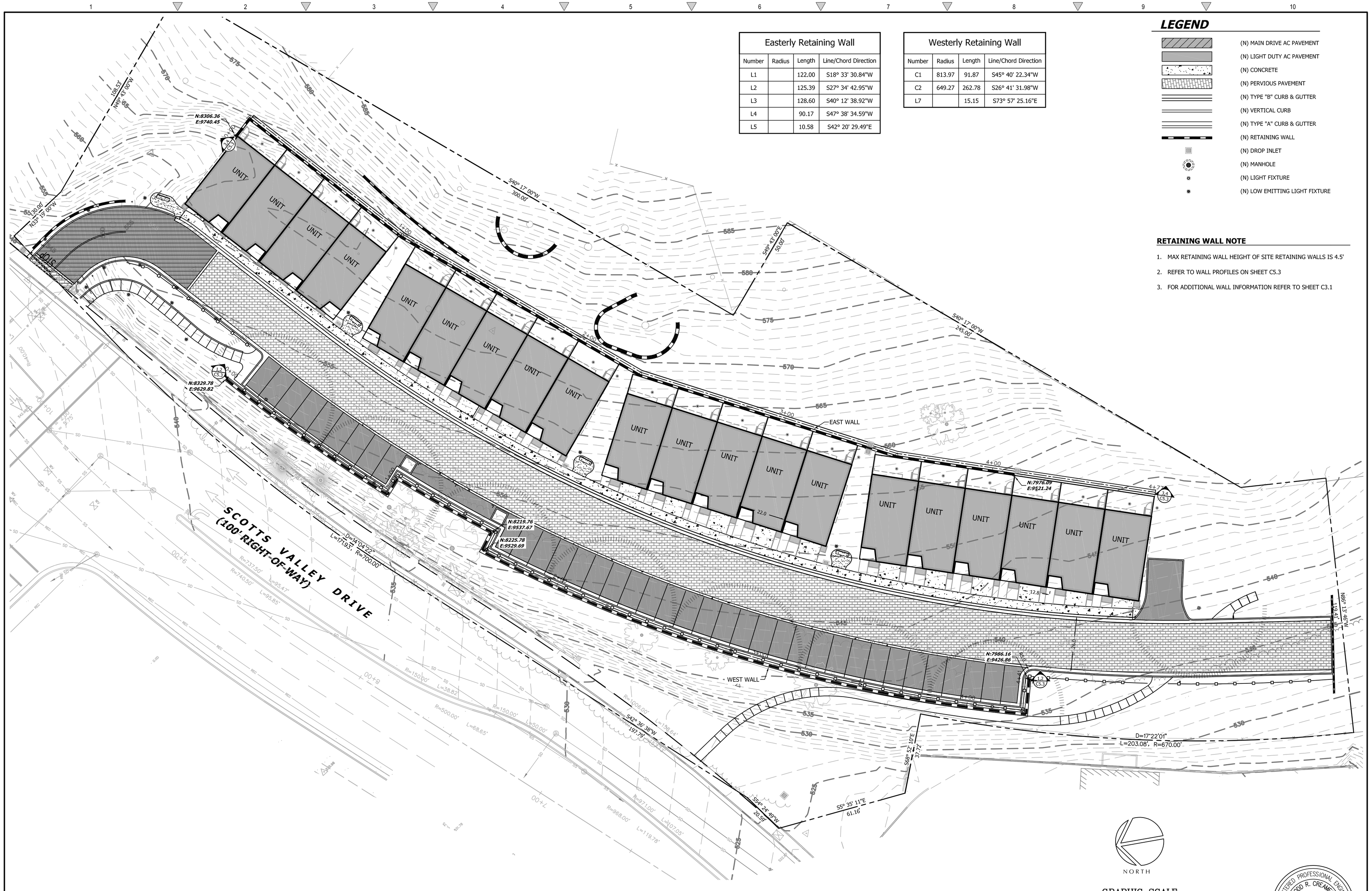

Easterly Retaining Wall

Number	Radius	Length	Line/Chord Direction
L1		122.00	S18° 33' 30.84"W
L2		125.39	S27° 34' 42.95"W
L3		128.60	S40° 12' 38.92"W
L4		90.17	S47° 38' 34.59"W
L5		10.58	S42° 20' 29.49"E

Westerly Retaining Wall

Number	Radius	Length	Line/Chord Direction
C1	813.97	91.87	S45° 40' 22.34"W
C2	649.27	262.78	S26° 41' 31.98"W
L7		15.15	S73° 57' 25.16"E

LEGEND

- (N) MAIN DRIVE AC PAVEMENT
- (N) LIGHT DUTY AC PAVEMENT
- (N) CONCRETE
- (N) PERVIOUS PAVEMENT
- (N) TYPE "B" CURB & GUTTER
- (N) VERTICAL CURB
- (N) TYPE "A" CURB & GUTTER
- (N) RETAINING WALL
- (N) DROP INLET
- (N) MANHOLE
- (N) LIGHT FIXTURE
- (N) LOW EMITTING LIGHT FIXTURE

RETAINING WALL NOTE

1. MAX RETAINING WALL HEIGHT OF SITE RETAINING WALLS IS 4.5'
2. REFER TO WALL PROFILES ON SHEET C5.3
3. FOR ADDITIONAL WALL INFORMATION REFER TO SHEET C3.1

REGISTERED PROFESSIONAL ENGINEER
TODD R. CREAMER
No. C 64561
Exp. 6/30/15
CIVIL
STATE OF CALIFORNIA

REVISIONS	BY
1 CITY COMMENTS 01.21.2015	DD
2 CITY COMMENTS 07.01.2015	DD

RETAINING WALL LAYOUT PLAN

C2G / CIVIL CONSULTANTS GROUP, INC.
Engineers/Planners
4444 Soquel Drive / Suite 6
Scotts Valley, CA 95066
T (831) 438-4420 F (831) 438-4420

THE TERRACE AT SCOTTS VALLEY
SCOTTS VALLEY, CA
APN: 022-162-69

Date: 09.09.14
Scale: 1":20'
Drawn: DD
Job: 249-50
Sheet: C2.2
Of 18 Sheets

W:\249-50 PERRI - SV CORN\CAD\MODELS\SV CORNERS BASE.DWG 8.31.2015

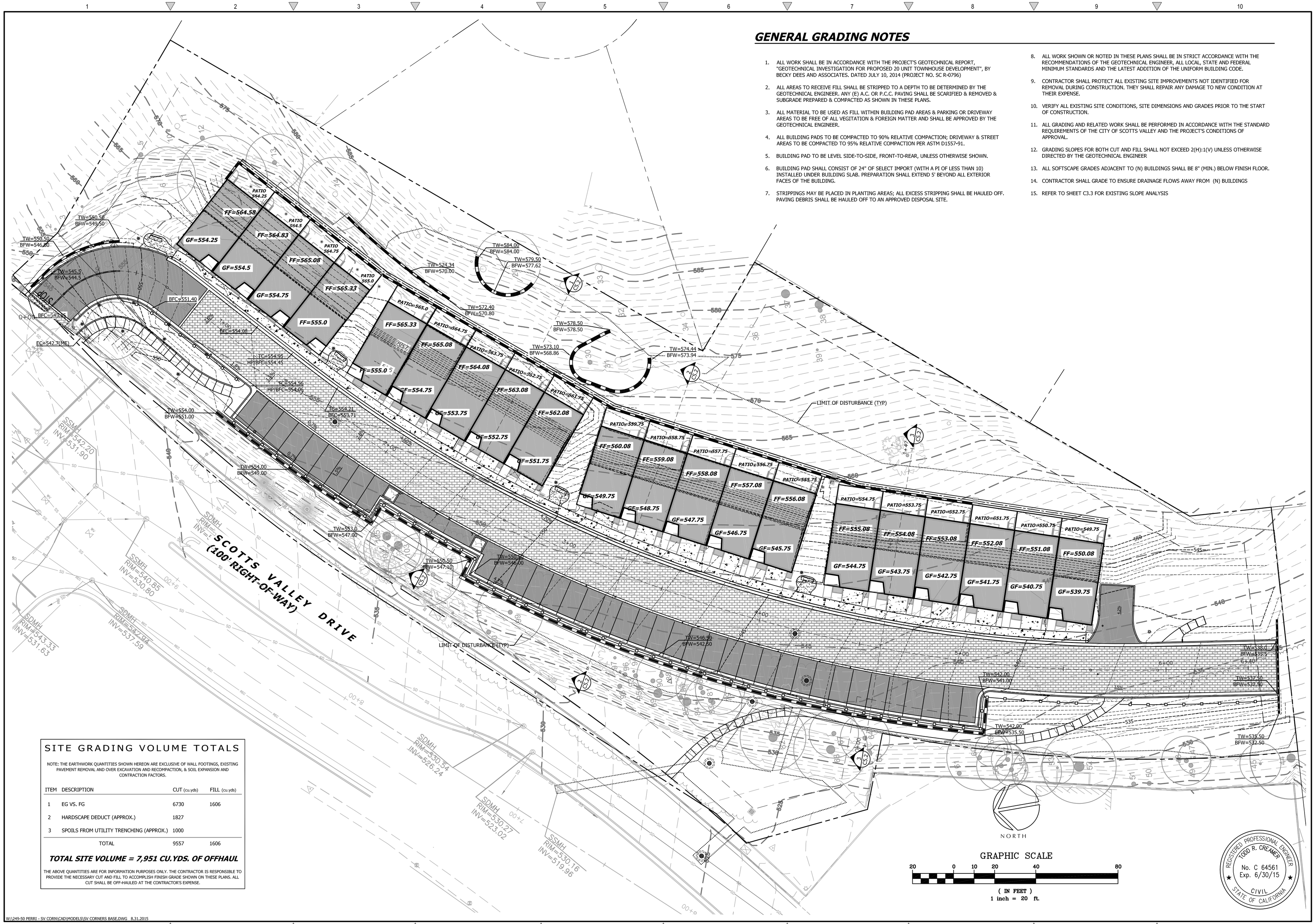

GENERAL GRADING NOTES

1. ALL WORK SHALL BE IN ACCORDANCE WITH THE PROJECT'S GEOTECHNICAL REPORT, "GEOTECHNICAL INVESTIGATION FOR PROPOSED 20 UNIT TOWNHOUSE DEVELOPMENT", BY BECKY DEES AND ASSOCIATES. DATED JULY 10, 2014 (PROJECT NO. SC R-0796)
2. ALL AREAS TO RECEIVE FILL SHALL BE STRIPPED TO A DEPTH TO BE DETERMINED BY THE GEOTECHNICAL ENGINEER. ANY (E) A.C. OR P.C.C. PAVING SHALL BE SCARIFIED & REMOVED & SUBGRADE PREPARED & COMPACTED AS SHOWN IN THESE PLANS.
3. ALL MATERIAL TO BE USED AS FILL WITHIN BUILDING PAD AREAS & PARKING OR DRIVEWAY AREAS TO BE FREE OF ALL VEGITATION & FOREIGN MATTER AND SHALL BE APPROVED BY THE GEOTECHNICAL ENGINEER.
4. ALL BUILDING PADS TO BE COMPACTED TO 90% RELATIVE COMPACTION; DRIVEWAY & STREET AREAS TO BE COMPACTED TO 95% RELATIVE COMPACTION PER ASTM D1557-91.
5. BUILDING PAD TO BE LEVEL SIDE-TO-SIDE, FRONT-TO-REAR, UNLESS OTHERWISE SHOWN.
6. BUILDING PAD SHALL CONSIST OF 24" OF SELECT IMPORT (WITH A PI OF LESS THAN 10) INSTALLED UNDER BUILDING SLAB. PREPARATION SHALL EXTEND 5' BEYOND ALL EXTERIOR FACES OF THE BUILDING.
7. STRIPPINGS MAY BE PLACED IN PLANTING AREAS; ALL EXCESS STRIPPING SHALL BE HAULED OFF. PAVING DEBRIS SHALL BE HAULED OFF TO AN APPROVED DISPOSAL SITE.
8. ALL WORK SHOWN OR NOTED IN THESE PLANS SHALL BE IN STRICT ACCORDANCE WITH THE RECOMMENDATIONS OF THE GEOTECHNICAL ENGINEER, ALL LOCAL, STATE AND FEDERAL MINIMUM STANDARDS AND THE LATEST ADDITION OF THE UNIFORM BUILDING CODE.
9. CONTRACTOR SHALL PROTECT ALL EXISTING SITE IMPROVEMENTS NOT IDENTIFIED FOR REMOVAL DURING CONSTRUCTION. THEY SHALL REPAIR ANY DAMAGE TO NEW CONDITION AT THEIR EXPENSE.
10. VERIFY ALL EXISTING SITE CONDITIONS, SITE DIMENSIONS AND GRADES PRIOR TO THE START OF CONSTRUCTION.
11. ALL GRADING AND RELATED WORK SHALL BE PERFORMED IN ACCORDANCE WITH THE STANDARD REQUIREMENTS OF THE CITY OF SCOTTS VALLEY AND THE PROJECT'S CONDITIONS OF APPROVAL.
12. GRADING SLOPES FOR BOTH CUT AND FILL SHALL NOT EXCEED 2(H):1(V) UNLESS OTHERWISE DIRECTED BY THE GEOTECHNICAL ENGINEER
13. ALL SOFTSCAPE GRADES ADJACENT TO (N) BUILDINGS SHALL BE 8" (MIN.) BELOW FINISH FLOOR.
14. CONTRACTOR SHALL GRADE TO ENSURE DRAINAGE FLOWS AWAY FROM (N) BUILDINGS
15. REFER TO SHEET C3.3 FOR EXISTING SLOPE ANALYSIS

SITE GRADING VOLUME TOTALS

NOTE: THE EARTHWORK QUANTITIES SHOWN HEREON ARE EXCLUSIVE OF WALL FOOTINGS, EXISTING PAVEMENT REMOVAL AND OVER EXCAVATION AND RECOMPACTION, & SOIL EXPANSION AND CONTRACTION FACTORS.

ITEM	DESCRIPTION	CUT (cu.yds)	FILL (cu.yds)
1	EG VS. FG	6730	1606
2	HARDSCAPE DEDUCT (APPROX.)	1827	
3	SPOILS FROM UTILITY TRENCHING (APPROX.)	1000	
	TOTAL	9557	1606

TOTAL SITE VOLUME = 7,951 CU.YDS. OF OFFHAUL

THE ABOVE QUANTITIES ARE FOR INFORMATION PURPOSES ONLY. THE CONTRACTOR IS RESPONSIBLE TO PROVIDE THE NECESSARY CUT AND FILL TO ACCOMPLISH FINISH GRADE SHOWN ON THESE PLANS. ALL CUT SHALL BE OFF-HAULED AT THE CONTRACTOR'S EXPENSE.

W:\249-50 PERRI - SV CORN\CAD\MODELS\SV CORNERS BASE.DWG 8.31.2015

REVISIONS	BY
1 CITY COMMENTS 01.21.2015	DD
2 CITY COMMENTS 07.01.2015	DD

TENTATIVE GRADING PLAN

C2G /CIVIL CONSULTANTS GROUP, INC.
Engineers/Planners
441 Kennedy Street / Suite 6
Scotts Valley, CA 95066
T (831) 438-4420 F (831) 438-4420

THE TERRACE AT SCOTTS VALLEY
SCOTTS VALLEY, CA
APN: 022-162-69

Date: 09.09.14
Scale: 1"=20'
Drawn: DD
Job: 249-50
Sheet: C3.1
Of 18 Sheets

REGISTERED PROFESSIONAL ENGINEER
TODD R. CREAMER
No. C 64561
Exp. 6/30/15
CIVIL
STATE OF CALIFORNIA

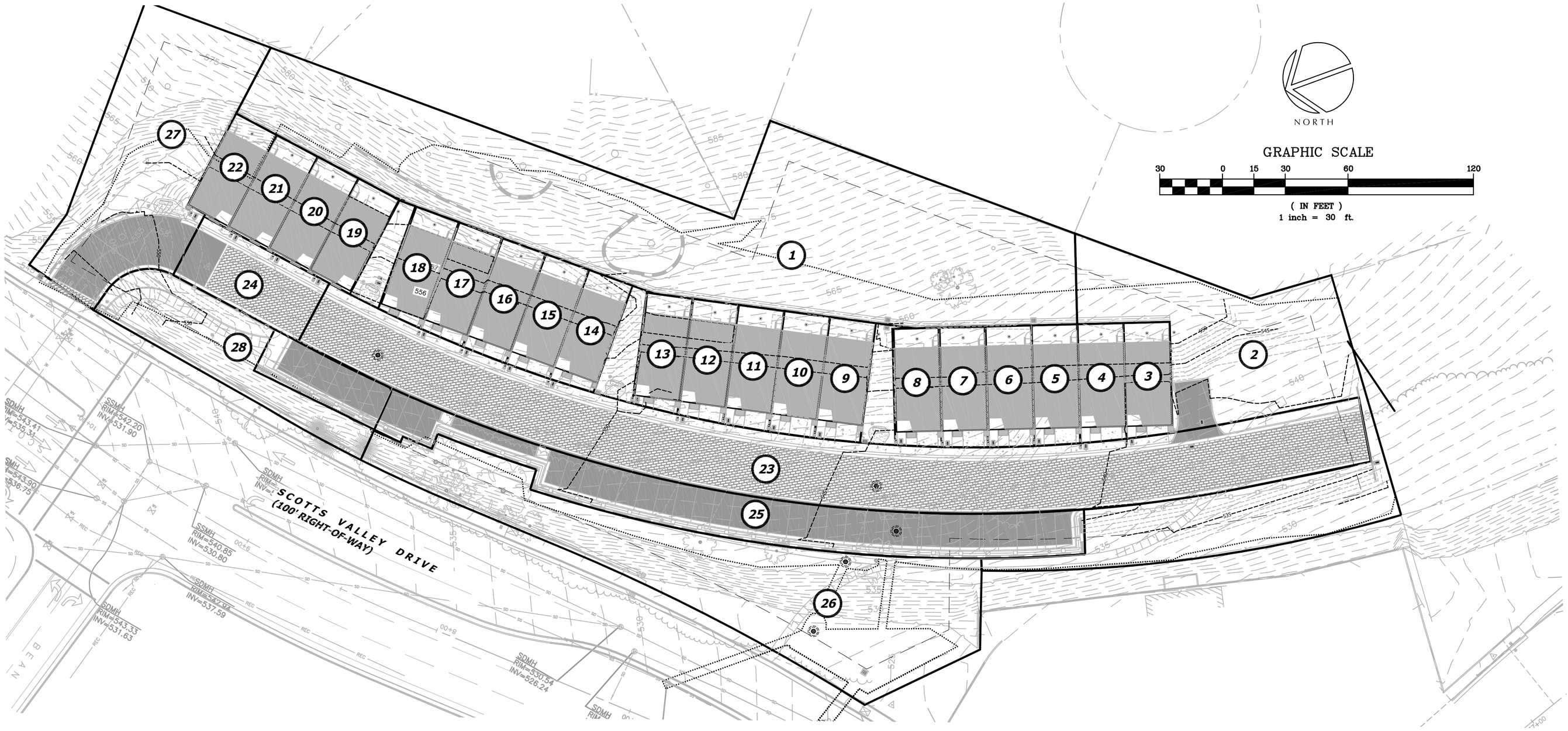

TREATMENT CALCULATIONS

	SQFT	ACRES
IMPERVIOUS AREA		
EXISTING	0	0
NEW		
BUILDING	17,600	0.404
ROAD/PARKING	6,538	0.150
SIDEWALK/PATIO	7,970	0.183
TOTAL INCREASE	32,108	0.737
% OF IMPERVIOUS OF SITE = 37%		
TREATMENT AREA PROVIDED		
PERVIOUS PAVEMENT	12,681	0.291
TOTAL AREA OF TREATMENT (OVER 10 TIMES THE REQUIRED AMOUNT)	12,681	0.291

RETENTION VOLUME CALCULATIONS

(TIER 4 REQUIREMENT PER SV STORMWATER TECHNICAL GUIDE)

SUM[DMA SF x RUNOFF FACTOR] x STORM DEPTH = V

[(32,108 SF x 1.0) + (15,000 SF x 0.1)] x0.2167' = 7283 CU.FT.

RETENTION PROVIDED

10" DRIAN ROCK SECTION UNDER PAVERS
- 15,778 cu.ft. x 0.40 VOIDS = 6,311 cu.ft.

TOTAL RETENTION VOLUME PROVIDED = 6,311 CU.FT.

DRAINAGE AREA TABLE

ID	TOTAL AREA (SQ FT)	TOTAL AREA (AC)	BUILDING (SQ FT)	BUILDING (AC)	ROAD (SQ FT)	ROAD (AC)	SIDEWALK (SQ FT)	SIDEWALK (AC)	TOTAL IMPERVIOUS AREA (SQ FT)	TOTAL IMPERVIOUS AREA (AC)	TOTAL PERVIOUS AREA (SQ FT)	TOTAL PERVIOUS AREA (AC)	RUNOFF COEFFICIENT (C)
1	22,221	0.510	0	0.000	0	0.000	1,026	0.024	1,026	0.024	21,195	0.487	0.378
2	13,054	0.300	0	0.000	402	0.009	34	0.001	441	0.010	12,618	0.290	0.370
3	1,199	0.028	1,091	0.025	0	0.000	50	0.001	1,141	0.026	58	0.001	0.921
4	1,242	0.029	1,091	0.025	0	0.000	66	0.002	1,157	0.027	85	0.002	0.909
5	1,268	0.029	1,091	0.025	0	0.000	76	0.002	1,167	0.027	101	0.002	0.902
6	1,277	0.029	1,091	0.025	0	0.000	79	0.002	1,170	0.027	107	0.002	0.900
7	1,270	0.029	1,091	0.025	0	0.000	74	0.002	1,165	0.027	105	0.002	0.900
8	1,246	0.029	1,091	0.025	0	0.000	63	0.001	1,154	0.026	92	0.002	0.906
9	1,281	0.029	1,091	0.025	0	0.000	81	0.002	1,172	0.027	109	0.003	0.899
10	1,288	0.030	1,091	0.025	0	0.000	83	0.002	1,174	0.027	114	0.003	0.897
11	1,277	0.029	1,091	0.025	0	0.000	77	0.002	1,168	0.027	109	0.003	0.899
12	1,250	0.029	1,091	0.025	0	0.000	65	0.001	1,156	0.027	94	0.002	0.905
13	1,207	0.028	1,091	0.025	0	0.000	45	0.001	1,136	0.026	71	0.002	0.915
14	1,214	0.028	1,091	0.025	0	0.000	54	0.001	1,145	0.026	69	0.002	0.916
15	1,229	0.028	1,091	0.025	0	0.000	59	0.001	1,150	0.026	79	0.002	0.911
16	1,223	0.028	1,091	0.025	0	0.000	57	0.001	1,148	0.026	75	0.002	0.913
17	1,208	0.028	1,091	0.025	0	0.000	48	0.001	1,139	0.026	69	0.002	0.916
18	1,173	0.027	1,091	0.025	0	0.000	29	0.001	1,120	0.026	53	0.001	0.923
19	1,124	0.026	1,091	0.025	0	0.000	14	0.000	1,105	0.025	19	0.000	0.940
20	1,123	0.026	1,091	0.025	0	0.000	13	0.000	1,104	0.025	19	0.000	0.940
21	1,122	0.026	1,091	0.025	0	0.000	13	0.000	1,104	0.025	18	0.000	0.940
22	1,108	0.025	1,091	0.025	0	0.000	3	0.000	1,094	0.025	14	0.000	0.942
23	15,841	0.364	0	0.000	0	0.000	3,988	0.092	3,988	0.092	11,853	0.272	0.501
24	2,149	0.049	0	0.000	386	0.009	586	0.013	972	0.022	1,177	0.027	0.621
25	6,161	0.141	0	0.000	45	0.001	1,912	0.044	1,957	0.045	4,204	0.097	0.541
26	11,654	0.268	0	0.000	0	0.000	0	0.000	0	0.000	11,654	0.268	0.350
27	7,951	0.183	0	0.000	1,570	0.036	236	0.005	1,806	0.041	6,145	0.141	0.486
28	4,871	0.112	0	0.000	0	0.000	1,396	0.032	1,396	0.032	3,475	0.080	0.522

	SQ FT	AC
TOTAL IMPERVIOUS AREA	34,455	0.791
TOTAL PERVIOUS AREA	73,781	1.694
TOTAL AREA	108,236	2.485

LEGEND

OVERFLOW BYPASS

FLOW DIRECTION

RESTRICTOR

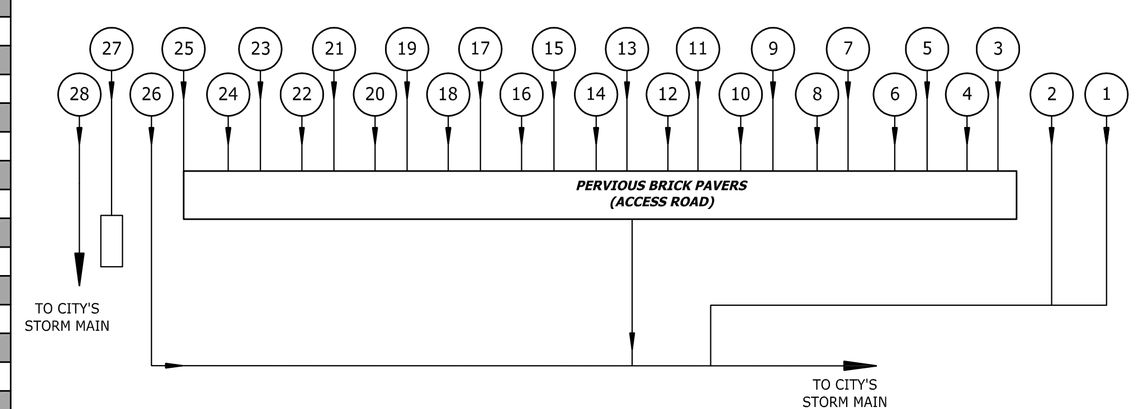

1 ONSITE DRAINAGE DIAGRAM

Scale: NTS

REGISTERED PROFESSIONAL ENGINEER
TODD R. CREAMER
No. C 64561
Exp. 6/30/15
CIVIL
STATE OF CALIFORNIA

REVISIONS	BY
1 CITY COMMENTS 01.21.2015	DD
2 CITY COMMENTS 07.01.2015	DD

TENTATIVE STORMWATER CONTROL PLAN

C2G / CIVIL CONSULTANTS GROUP, INC.
Engineers/Planners
4444 Soquel Drive / Suite 6
Scotts Valley, CA 95066
T (831) 438-4420 F (831) 438-4420

THE TERRACE AT SCOTTS VALLEY
SCOTTS VALLEY, CA
APN: 022-162-69

Date: 09.09.14
Scale: 1"=30'
Drawn: DD
Job: 249-50
Sheet: C3.2
Of 18 Sheets

W:\249-50 PERRI - SV CORN\CAD\MODELS\SV CORNERS BASE.DWG 8.31.2015

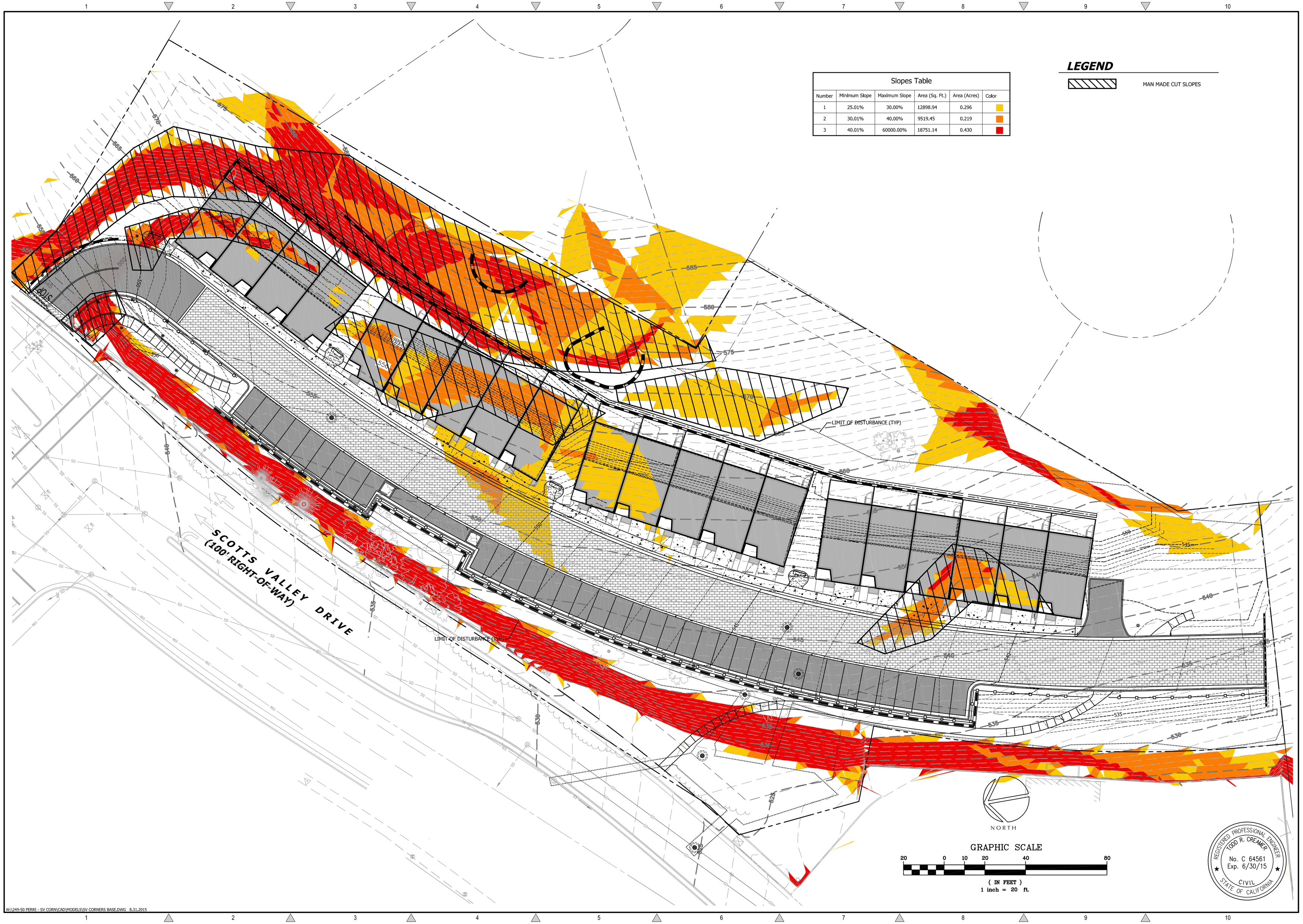

LEGEND

MAN MADE CUT SLOPES

Slopes Table

Number	Minimum Slope	Maximum Slope	Area (Sq. Ft.)	Area (Acres)	Color
1	25.01%	30.00%	12898.94	0.296	
2	30.01%	40.00%	9519.45	0.219	
3	40.01%	60000.00%	18751.14	0.430	

W:\249-50 PERRI - SV CORN\CAD\MODELS\SV CORNERS BASE.DWG 8.31.2015

REVISIONS	BY
1 CITY COMMENTS 01.21.2015	DD
2 CITY COMMENTS 07.01.2015	DD

SLOPE ANALYSIS PLAN

C2G /CIVIL CONSULTANTS GROUP, INC.
Engineers/Planners
4444 Soquel Drive / Suite 6
Scotts Valley, CA 95066
T (831) 438-4420 F (831) 438-4420

THE TERRACE AT SCOTTS VALLEY
SCOTTS VALLEY, CA
APN: 022-162-69

Date: 09.09.14
Scale: 1"=20'
Drawn: DD
Job: 249-50
Sheet: C3.3
Of 18 Sheets

NOTES:
1. ALL WATER UTILITY INSTALLATIONS AND ASSOCIATED EQUIPMENT SHALL BE IN ACCORDANCE WITH SVWD APRIL 2011 STANDARD SPECIFICATIONS AND DETAILS
2. DEFLECT SEWER & WATER ONSITE MAINS NOT TO EXCEED 3° FOR EVERY 20-FT OF PIPE

UTILITY LEGEND

PROPOSED	EXISTING	DESCRIPTION
SD	SD	STORM MANHOLE
		CURB INLET
		DITCH/DROP INLET
SS	SS	SEWER MANHOLE
		GATE VALVE
		UTILITY POLE
SS	SS	SEWER LATERAL
		WATER SERVICE
		CLEAN OUT
SD	SD	STORM DRAIN
SS	SS	SANITARY SEWER
W	W	WATER MAIN
GAS	GAS	GAS
E	E	ELECTRICAL
JT	JT	JOINT TRENCH
T	T	TELEPHONE
		PROPERTY LINE
		CENTER LINE
REC	REC	RECLAIMED WATER

(N) 6" WATER MAIN
(N) 6" REC. WATER MAIN
SSCO RIM=552.50 INV=549.50
SDCO RIM=553.5 INV=551.5
CONNECT TO CITY STORM DRAIN SYSTEM
CONTRACTOR SHALL POTHOLE (E) 6"Φ DOM. W STUB. SVWD DISTRICT SHALL INSPECT & APPROVE THAT CONDITION OF (E) 6" STUB IS SUITABLE FOR RE-USE. IF SO, CONNECT TO (E) RECLAIMED WATER LINE STUB. OTHERWISE CONNECTION SHALL BE MADE @ VALVE IN S.V. DRIVE.
CONTRACTOR SHALL POTHOLE (E) 6"Φ REC. W STUB. SVWD DISTRICT SHALL INSPECT & APPROVE THAT CONDITION OF (E) 6" STUB IS SUITABLE FOR RE-USE. IF SO, CONNECT TO (E) RECLAIMED WATER LINE STUB. OTHERWISE CONNECTION SHALL BE MADE @ VALVE IN S.V. DRIVE.
SSMH#4 TYPE: 24" RIM= 554.00 INV= 548.50
DOMESTIC WATER POC W/ REDUCED PRESSURE BFP PER SVWD STANDARD DETAIL (TYP)
SDDI#5 TYPE: V64 RIM= 558.57 INV= 548.47
SDDI#4 TYPE: V64 RIM= 554.00 INV= 548.69
SDDI#6 TYPE: V64 RIM= 554.42 INV= 548.46
(N) STANDARD BLOW-OFF ASSEMBLY PER SVWD STANDARD DETAIL
SSCO RIM=539.0 INV=536.0
SDCO RIM=538.7 INV=536.7
SSMH#3 TYPE: 24" RIM= 544.77 INV= 535.20
SDMH #2 TYPE: V64 RIM= 538.61 INV= 533.11
SSMH#1 TYPE: 24" RIM= 537.28 INV= 521.78
SSMH#2 TYPE: 24" RIM= 539.62 INV= 534.12
CONNECT TO CITY SEWER MAIN
SDDI#1 TYPE: V64 RIM= 525.47 INV= 522.30
SDMH#1 TYPE: 24" RIM= 524.5 INV= 520.2
CONNECT TO CITY STORM DRAIN SYSTEM
SCOTTS VALLEY DRIVE (100' RIGHT-OF-WAY)
SSMH RIM=542.20 INV=531.90
SDMH RIM=540.85 INV=530.80
SDMH RIM=543.33 INV=531.63
SDMH RIM=542.94 INV=537.59
SDMH RIM=530.54 INV=526.24
SDMH RIM=530.27 INV=523.02
SSMH RIM=530.16 INV=519.96

NORTH

GRAPHIC SCALE
20 0 10 20 40 80
(IN FEET)
1 inch = 20 ft.

REGISTERED PROFESSIONAL ENGINEER TODD R. CREAMER No. C 64561 Exp. 6/30/15 CIVIL STATE OF CALIFORNIA

W:\249-50 PERRI - SV CORN\CAD\MODELS\SV CORNERS BASE.DWG 8.31.2015

REVISIONS	BY
1 CITY COMMENTS 01.21.2015	DD
2 CITY COMMENTS 07.01.2015	DD

UTILITY PLAN

C2G / CIVIL CONSULTANTS GROUP, INC.
Engineers/Planners
4444 Scotts Valley Drive / Suite 6
Scotts Valley, CA 95066
T (831) 438-4420 F (831) 438-4420

THE TERRACE AT SCOTTS VALLEY
SCOTTS VALLEY, CA
APN: 022-162-69

Date: 09.09.14
Scale: 1"=20'
Drawn: DD
Job: 249-50
Sheet: C4.1
Of 18 Sheets

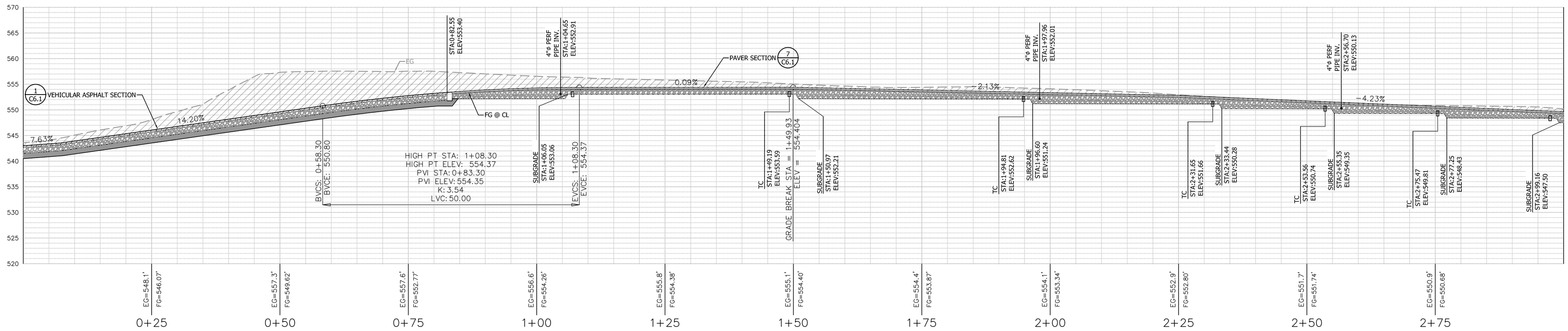

1 ACCESS ROAD CENTERLINE PROFILE (STA. 0+20 TO 3+30)

Scale: 1":10'

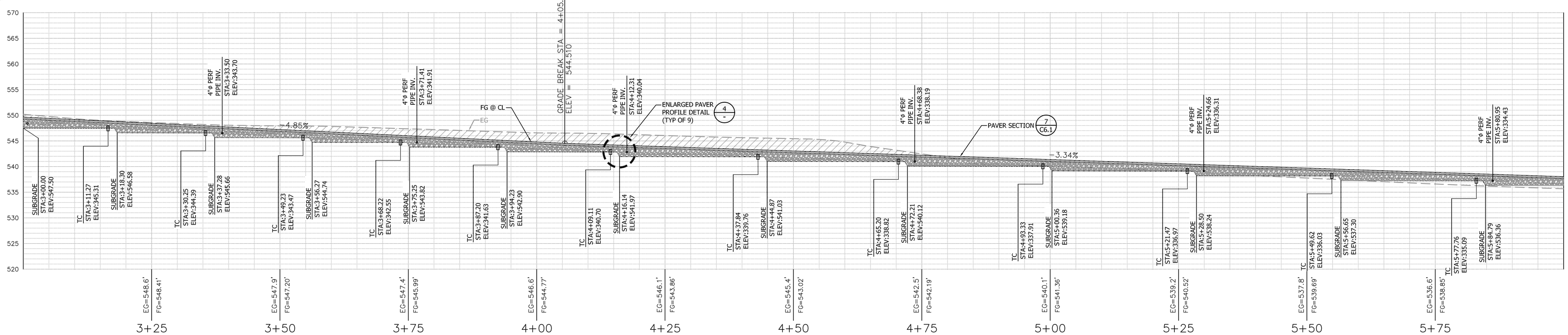

2 ACCESS ROAD CENTERLINE PROFILE (STA. 3+30 TO 6+00)

Scale: 1":10'

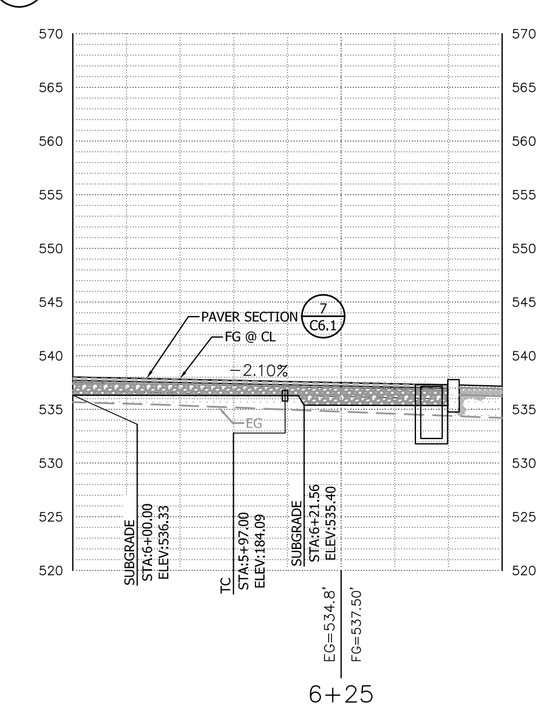

3 CENTERLINE PROFILE (STA. 6+00 TO 6+37)

Scale: 1":10'

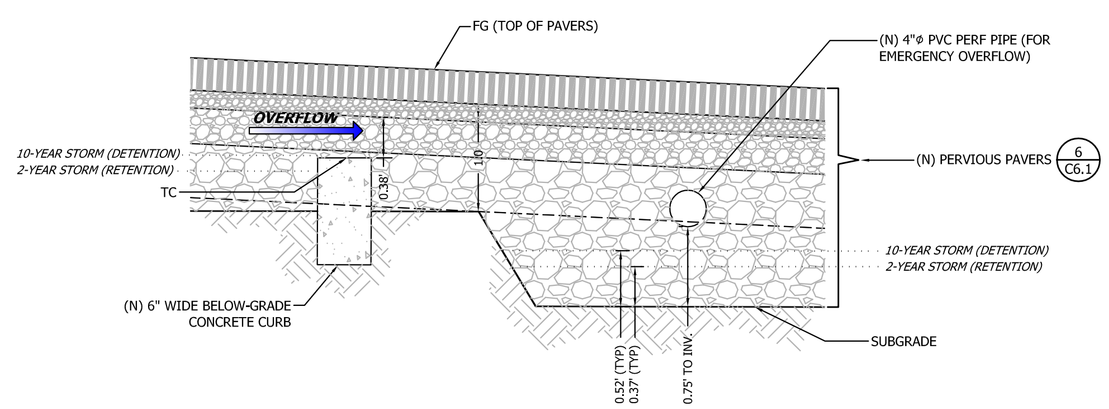

4 PAVER PROFILE DETAIL

Scale: 1":1'

W:\249-50 PERRI - SV CORN\CAD\MODELS\SV CORNERS BASE.DWG 8.31.2015

REVISIONS		BY
1	CITY COMMENTS 01.21.2015	DD
2	CITY COMMENTS 07.01.2015	DD

ACCESS ROAD PROFILE

C2G /CIVIL CONSULTANTS GROUP, INC.
Engineers/Planners
4444 Soquel Valley Drive / Suite 6
Scotts Valley, CA 95066
T (831) 438-4420 F (831) 438-4420

THE TERRACE AT SCOTTS VALLEY
SCOTTS VALLEY, CA
APN: 022-162-69

REGISTERED PROFESSIONAL ENGINEER
TODD R. CREMER
No. C 64561
Exp. 6/30/15
CIVIL
STATE OF CALIFORNIA

Date: 09.09.14
Scale: 1"=10'
Drawn: DD
Job: 249-50
Sheet: C5.1
Of 18 Sheets

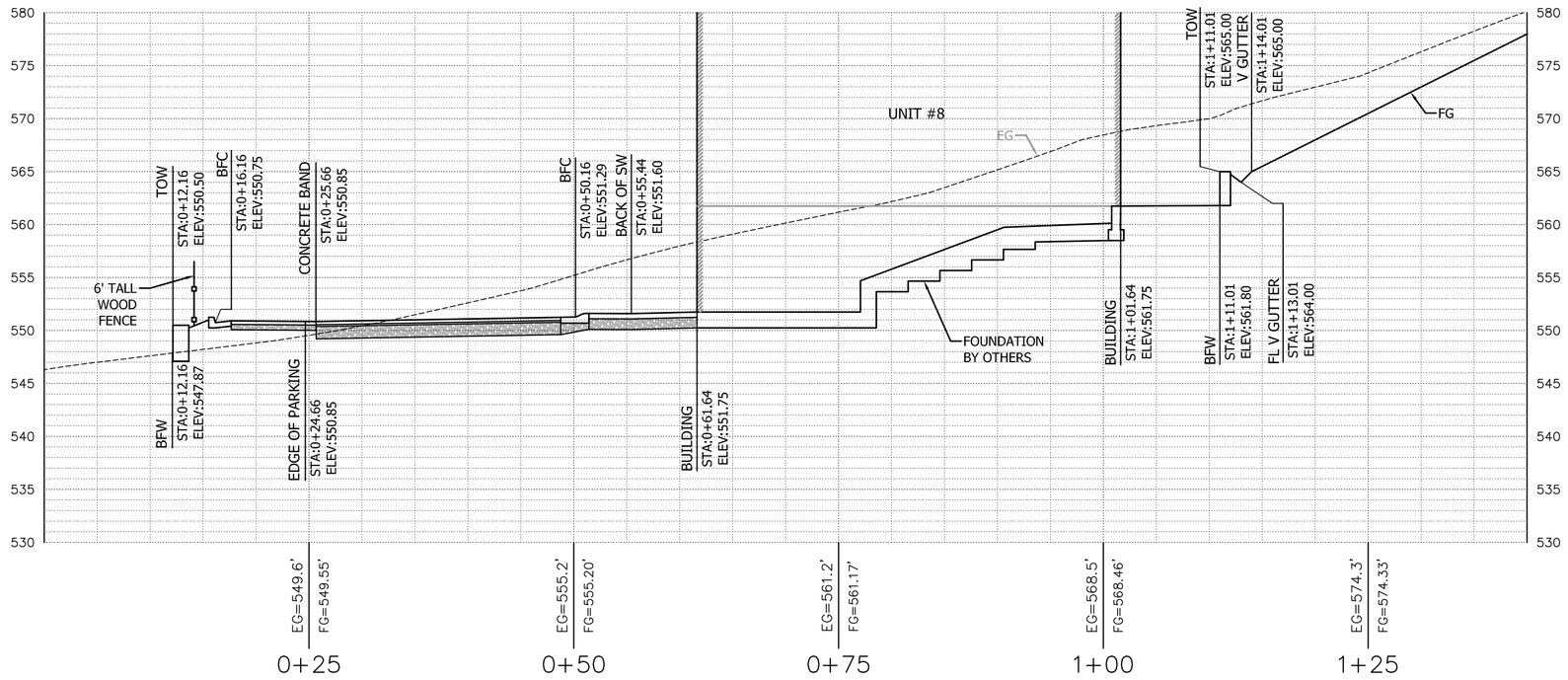

1 SITE CROSS SECTION @ STA. 260+00

Scale: 1":10'

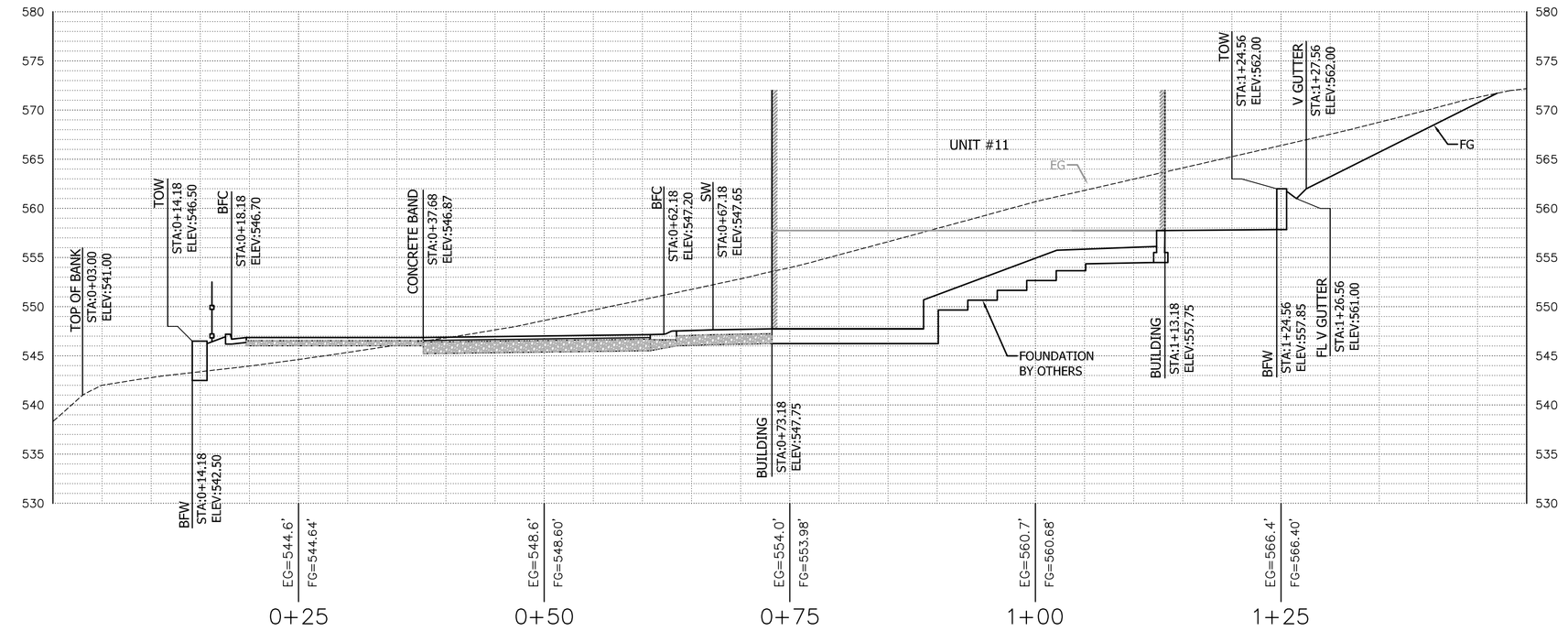

2 SITE CROSS SECTION @ STA. 350+00

Scale: 1":10'

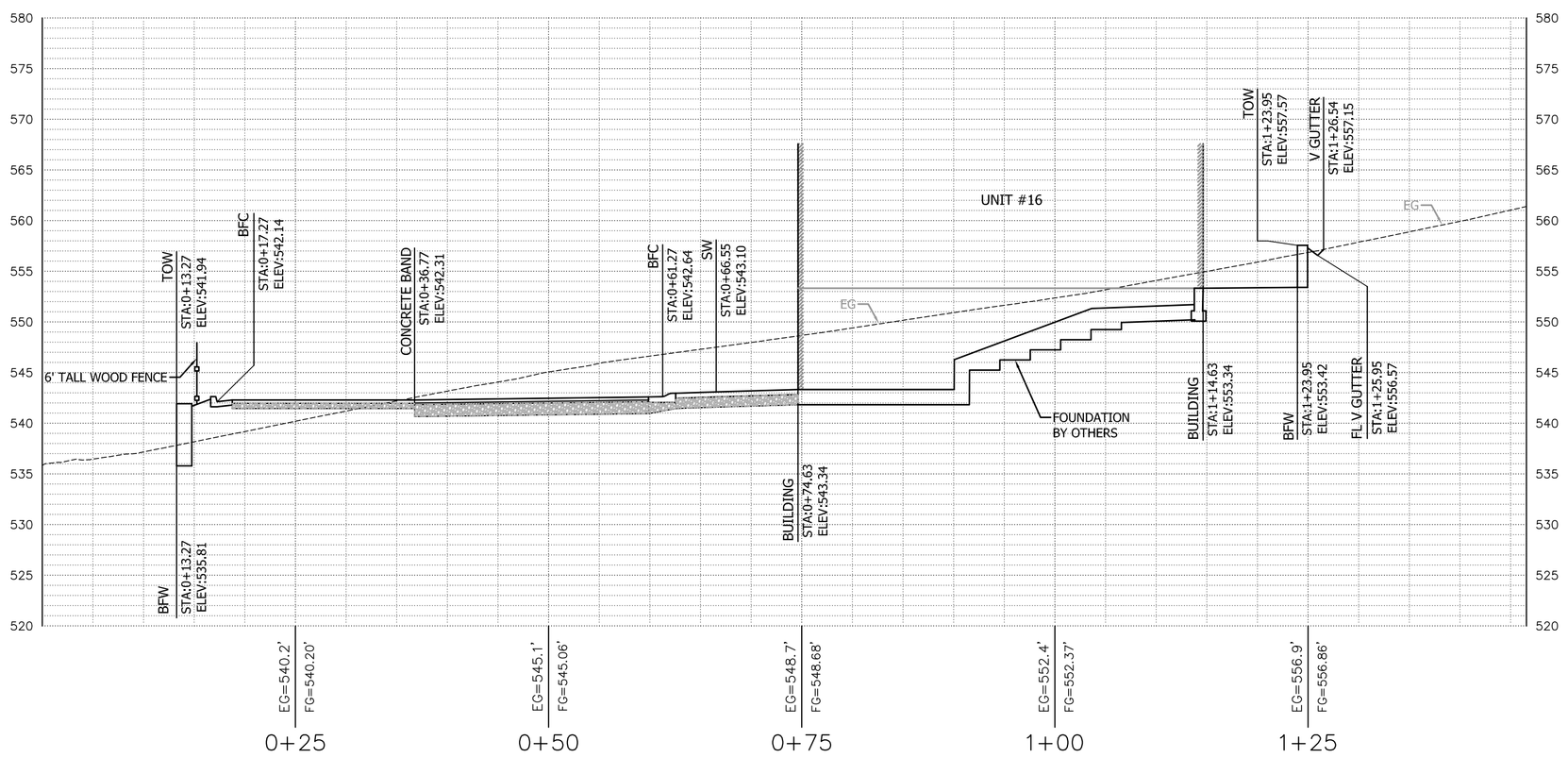

3 SITE CROSS SECTION @ STA. 475+00

Scale: 1":10'

REGISTERED PROFESSIONAL ENGINEER
TODD R. CREAMER
No. C 64561
Exp. 6/30/15
CIVIL
STATE OF CALIFORNIA

W:\249-50 PERRI - SV CORN\CAD\MODELS\SV CORNERS BASE.DWG 8.31.2015

REVISIONS	BY
1 CITY COMMENTS 01.21.2015	DD
2 CITY COMMENTS 07.01.2015	DD

SITE CROSS SECTIONS

C2G / CIVIL CONSULTANTS GROUP, INC.
Engineers/Planners
4444 Scotts Valley Drive / Suite 6
Scotts Valley, CA 95066
T (831) 438-4420 F (831) 438-4420

THE TERRACE AT SCOTTS VALLEY
SCOTTS VALLEY, CA
APN: 022-162-69

Date: 09.09.14
Scale: 1"=10'
Drawn: DD
Job: 249-50
Sheet: C5.2
Of 18 Sheets

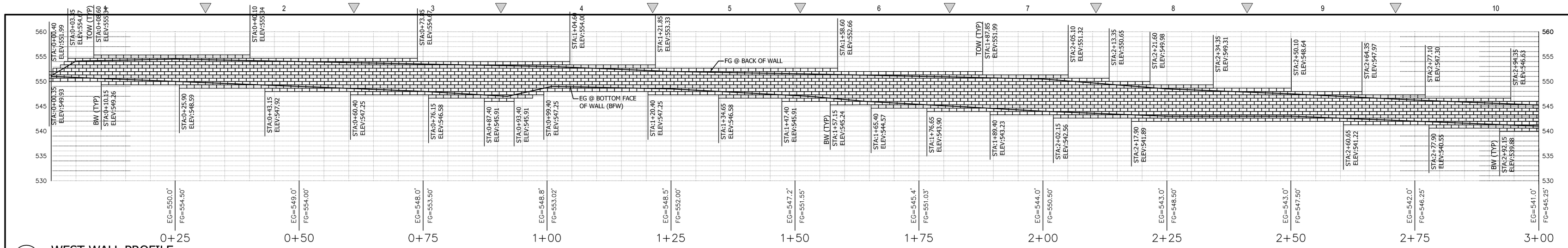

1 WEST WALL PROFILE

Scale: 1":10'

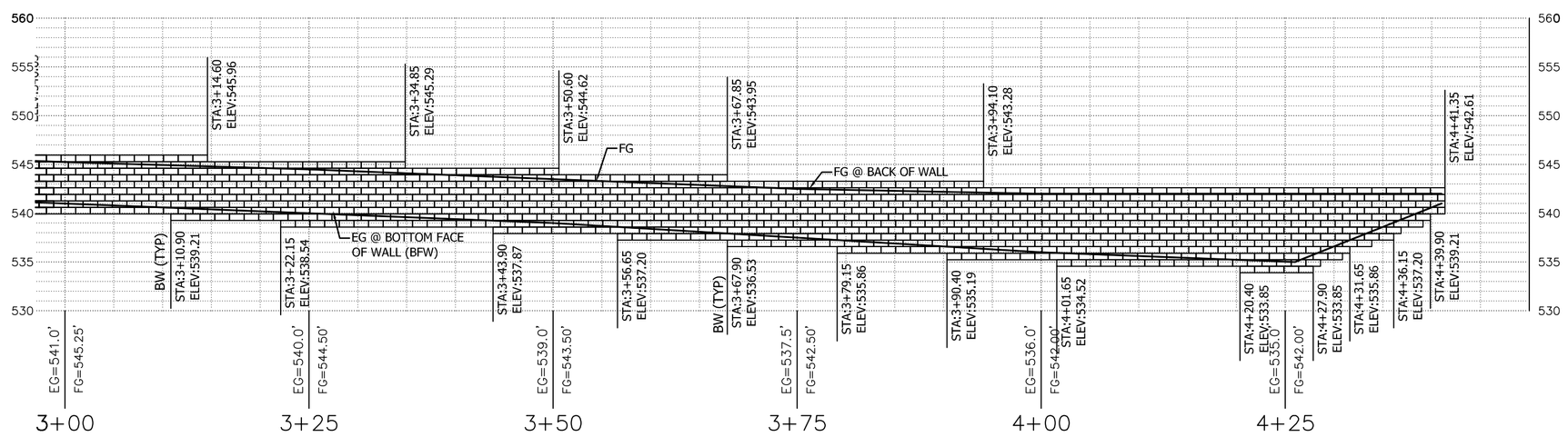

2 WEST WALL PROFILE (CONTINUATION)

Scale: 1":10'

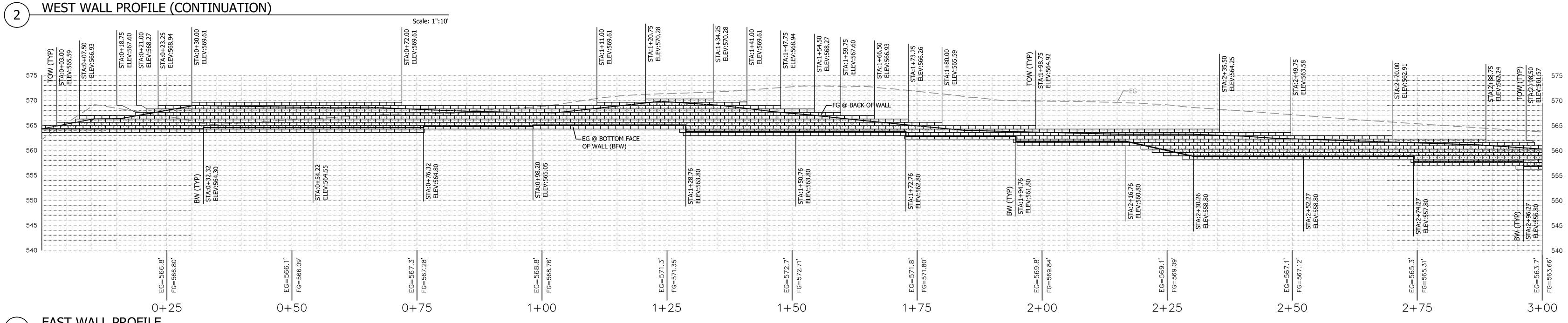

3 EAST WALL PROFILE

Scale: 1":10'

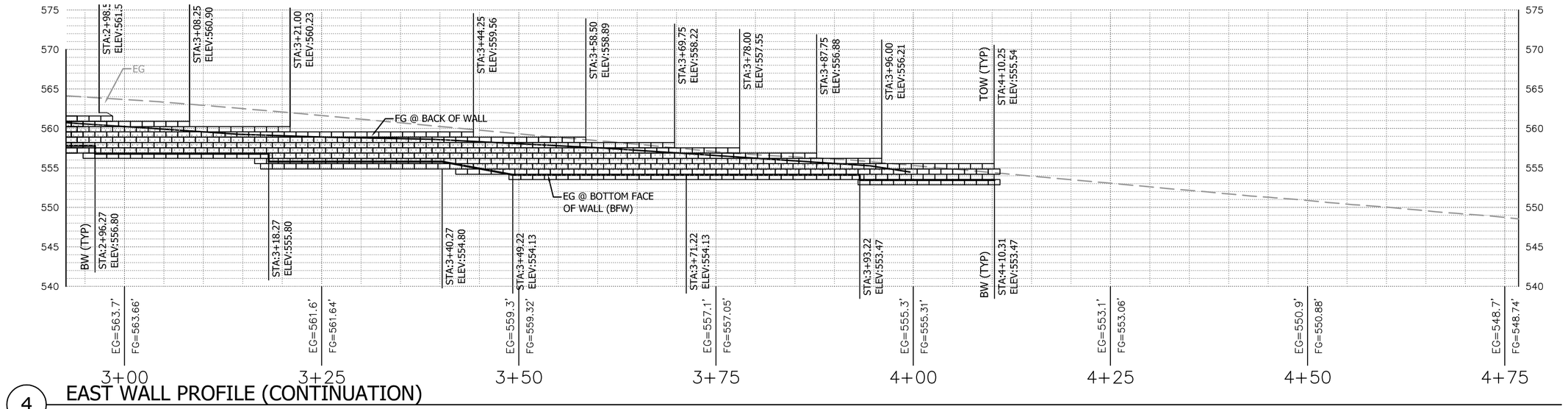

4 EAST WALL PROFILE (CONTINUATION)

Scale: 1":10'

W:\249-50 PERRI - SV CORN\CAD\MODELS\SV CORNERS BASE.DWG 8.31.2015

REVISIONS		BY
1	CITY COMMENTS 01.21.2015	DD
2	CITY COMMENTS 07.01.2015	DD

WALL PROFILES

C2G /CIVIL CONSULTANTS GROUP, INC.
Engineers/Planners
4444 Scotts Valley Drive / Suite 6
Scotts Valley, CA 95066
T (831) 438-4420 F (831) 438-4420

THE TERRACE AT SCOTTS VALLEY
SCOTTS VALLEY, CA
APN: 022-162-69

REGISTERED PROFESSIONAL ENGINEER
TODD R. CREAMER
No. C 64561
Exp. 6/30/15
CIVIL
STATE OF CALIFORNIA

Date: 09.09.14
Scale: 1"=10'
Drawn: DD
Job: 249-50
Sheet: C5.3
Of 18 Sheets

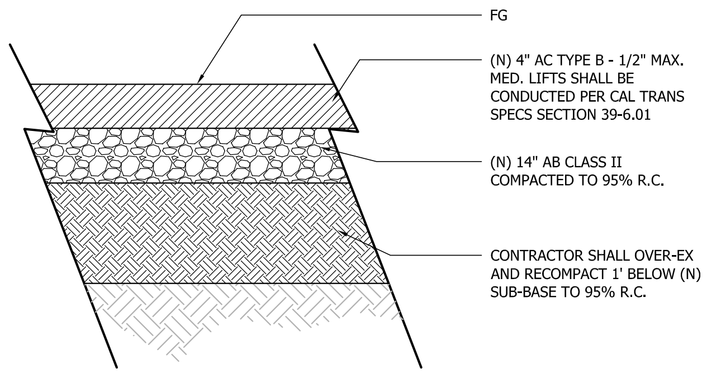

1 MAIN DRIVE PAVEMENT SECTION

Scale: NTS

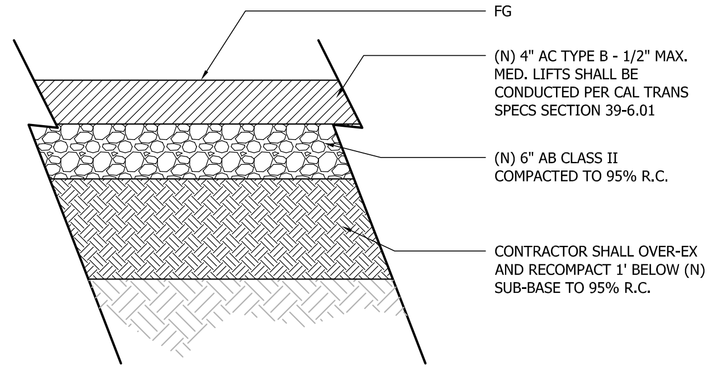

2 LIGHT DUTY PAVEMENT SECTION (PARKING STALLS ONLY)

Scale: NTS

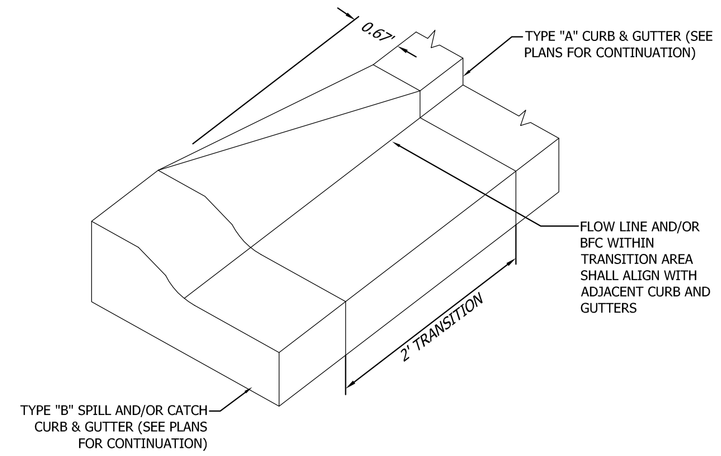

3 CURB TRANSITION

Scale: NTS

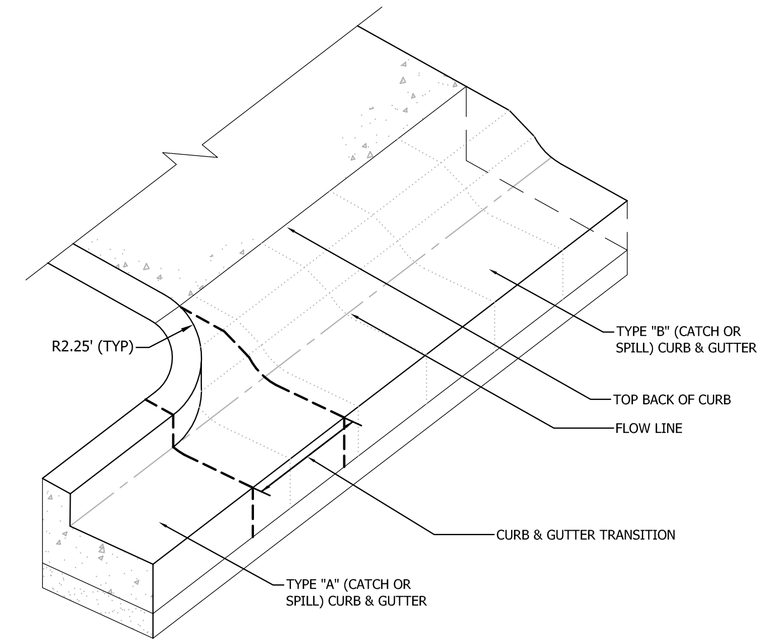

4 CURB TRANSITION #2

Scale: NTS

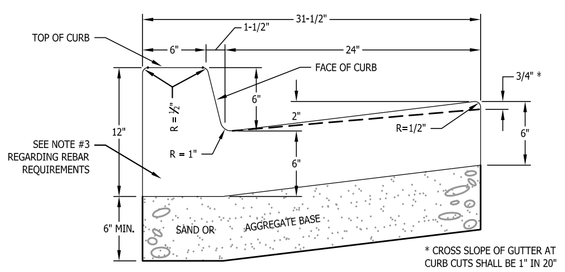

TYPE A CURB AND GUTTER (CATCH)

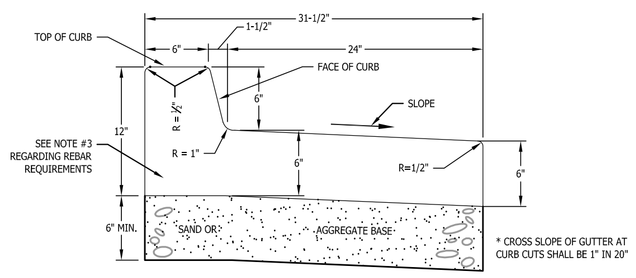

TYPE A CURB AND GUTTER (SPILL)

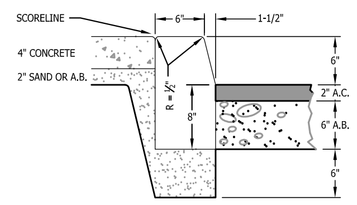

TYPE C CURB

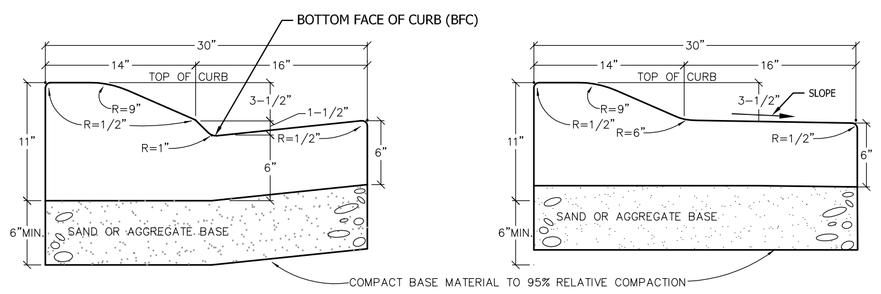

TYPE B CURB AND GUTTER (CATCH)

TYPE B CURB AND GUTTER (SPILL)

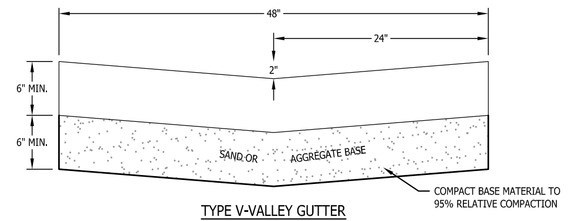

TYPE V-VALLEY GUTTER

1. TYPE A, B & C CURB, GUTTER & SIDEWALK ARE TO BE CONSTRUCTED OF CLASS B CONCRETE, 6 SACK MINIMUM.
2. WEAKENED PLANE JOINTS SHALL BE CONSTRUCTED AT 20' INTERVALS, AND AT THE ENDS OF RETURNS. EXPANSION JOINTS SHALL BE AT MAXIMUM 60 FEET SPACING.
3. IF SIDEWALK IS NOT INSTALLED MONOLITHICALLY WITH CURB & GUTTER, PLACE #4 DOWELS 18" LONG AT 4' O.C. IN BACK OF CURB 2" DOWN FROM TOP OF CURB, 6" IN CONCRETE.

5 CONCRETE CURBS & GUTTERS

Scale: NTS

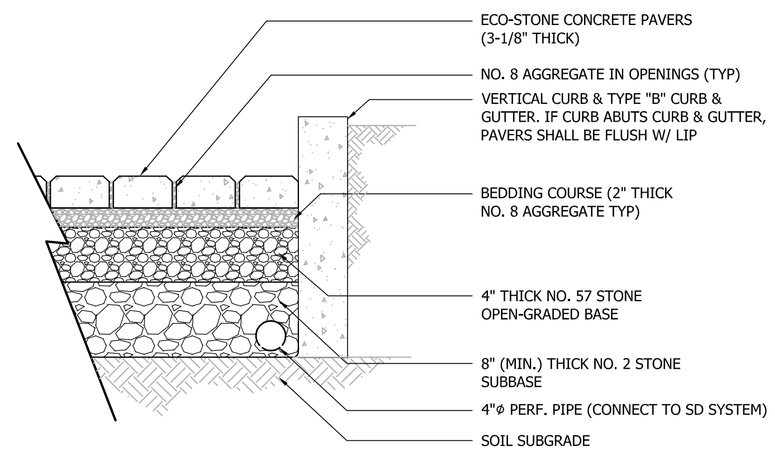

7 PAVER SECTION

Scale: NTS

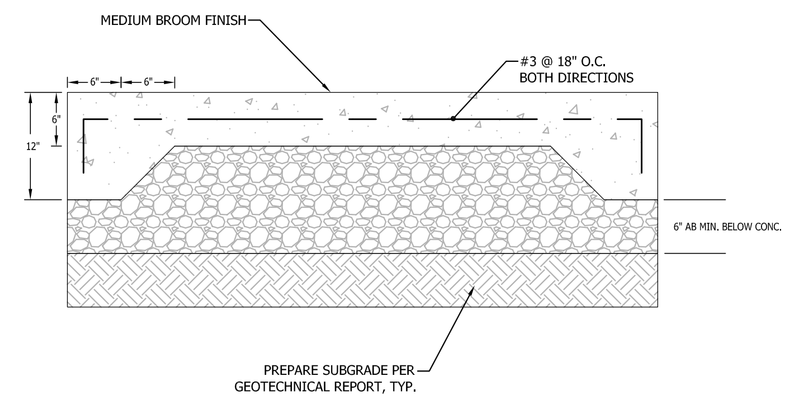

NOTE:

1. TYPE OF CONCRETE: CLASS A
2. MINIMUM 6" CLASS 2 AB, COMPACTED TO 95%.
3. SEE LANDSCAPE PLAN FOR LOCATION OF SCORING AND EXPANSION JOINTS.
4. DOWEL WITH #4 BARS, 12" LONG, AT 24" ON CENTERS, EMBEDDED 4" WITH EPOXY IN EDGE OF EXISTING CONCRETE.
5. DOWELING & REINFORCING TO BE PROVIDED AT JOINTS.

8 VEHICULAR CONCRETE SECTION

Scale: NTS

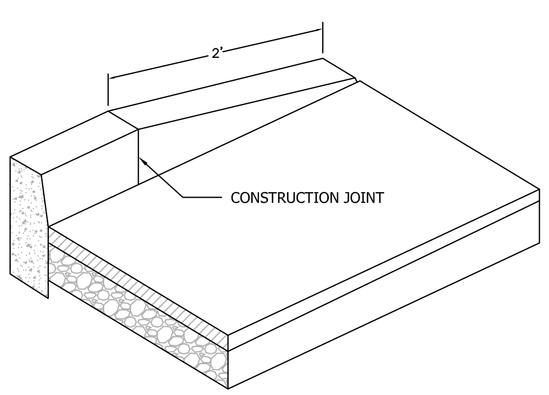

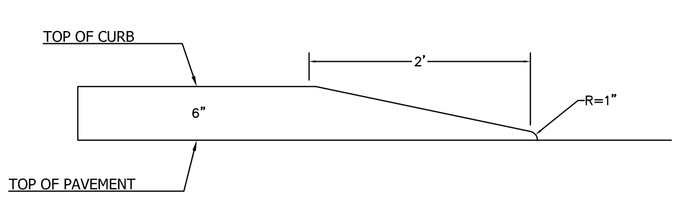

9 CURB TAPER

Scale: NTS

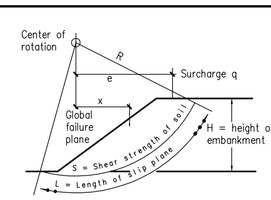

Slope stability analysis diagram

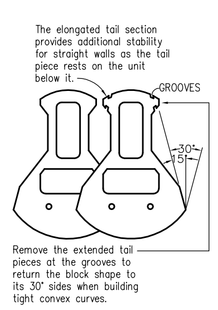

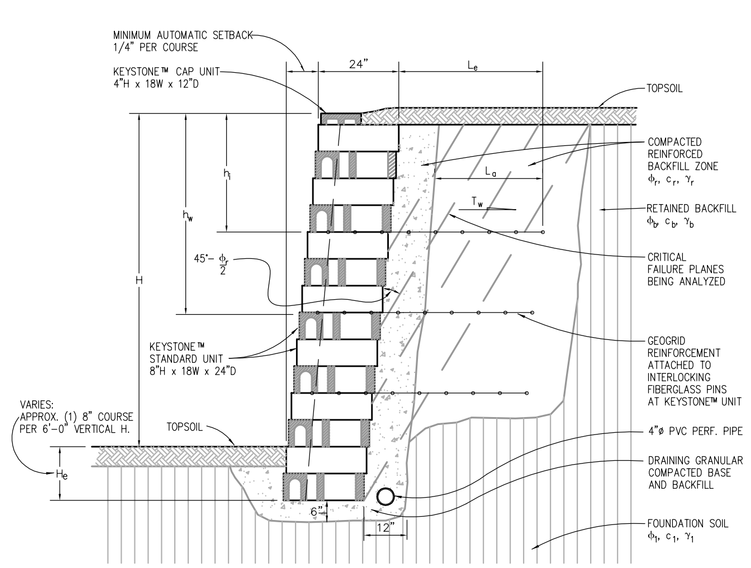

TYPICAL WALL SECTION TERMS

BASIC GEOGRID PLACEMENT CHART *

WALL HEIGHT FEET	CASE	GRID TYPE *	NUMBER OF LAYERS	GEOGRID LENGTH FEET	GEOGRID LAYER NUMBER 1	2	3	4	5	DISTANCE ABOVE BASE IN FEET
4	A		–							
4	B		–							
4	C		1	2.5	1.5					
5	A		–							
5	B		1	2.5	2					
5	C		2	3.7	1.3	3.3				
6	A		1	2.5	2.7					
6	B		2	2.5	1.3	3.3				
6	C		3	4.3	.7	2	4			
7	A		2	3.0	1.3	4.0				
7	B		3	3.0	1.3	2.7	4.7			
7	C		3	4.9	1.3	2.7	4.7			
8	A		3	3.2	1.3	3.3	5.3			
8	B		4	3.5	.7	2.7	4.7	6.7		
8	C		3	5.8	1.3	3.3	5.3			
10	A		3	4.3	1.3	4	6.7			
10	B		4	4.6	1.3	3.3	5.3	7.3		
10	C		3	7.0	1.3	4.0	6.7			

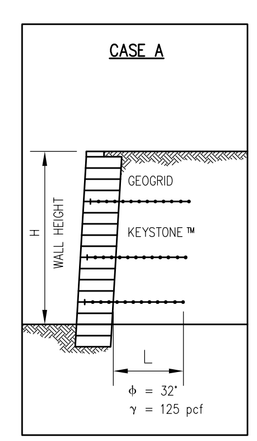

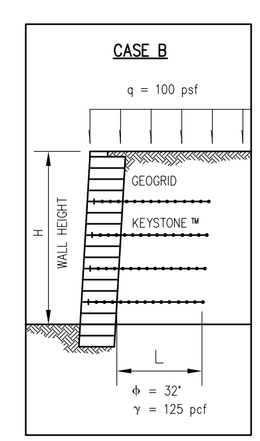

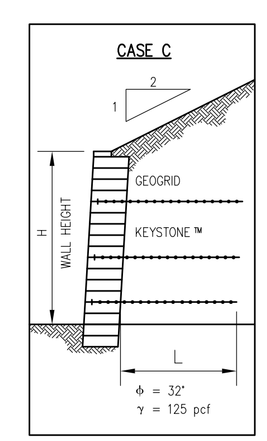

10 KEYSTONE BLOCK RETAINING WALL

Scale: NTS

REGISTERED PROFESSIONAL ENGINEER TODD R. CREMER No. C 64561 Exp. 6/30/15 CIVIL STATE OF CALIFORNIA

W:\249-50 PERRI - SV CORN\CAD\MODELS\SV CORNERS BASE.DWG 8.31.2015

REVISIONS	BY
1 CITY COMMENTS 01.21.2015	DD
2 CITY COMMENTS 07.01.2015	DD

CONSTRUCTION DETAILS

C2G / CIVIL CONSULTANTS GROUP, INC.
Engineers/Planners
4444 Soquel Valley Road / Suite 6
Scotts Valley, CA 95066
T (831) 438-4420 F (831) 438-4420

THE TERRACE AT SCOTTS VALLEY
SCOTTS VALLEY, CA
APN: 022-162-69

Date: 09.09.14
Scale: 1"=10'
Drawn: DD
Job: 249-50
Sheet: C6.1
Of 18 Sheets

NOTE: FOR SIGNS R1-1, W14-2, R3-5 & R26F (CA) SIZE, LETTERING SIZE, & COLORS SHALL BE PER MUTCD CA

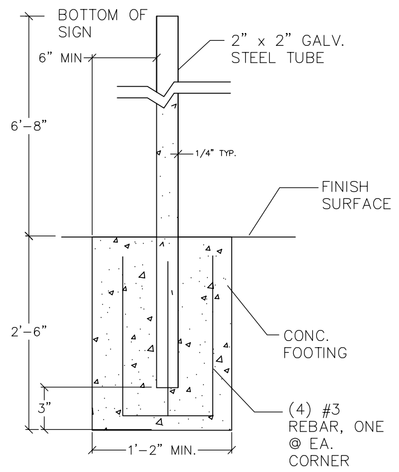

1 SIGN DETAILS (ONSITE)

Scale: NTS

REVISIONS	BY
1 CITY COMMENTS 01.21.2015	DD
2 CITY COMMENTS 07.01.2015	DD

CONSTRUCTION DETAILS

C2G /CIVIL CONSULTANTS GROUP, INC.
Engineers/Planners
4444 Scotts Valley Drive / Suite 6
Scotts Valley, CA 95066
T (831) 438-4420 F (831) 438-4420

THE TERRACE AT SCOTTS VALLEY
SCOTTS VALLEY, CA
APN: 022-162-69

Date: 09.09.14
Scale: 1"=10'
Drawn: DD
Job: 249-50
Sheet: C6.2
Of 18 Sheets

REGISTERED PROFESSIONAL ENGINEER
TODD R. CREMER
No. C 64561
Exp. 6/30/15
CIVIL
STATE OF CALIFORNIA

W:\249-50 PERRI - SV CORN\CAD\MODELS\SV CORNERS BASE.DWG 8.31.2015

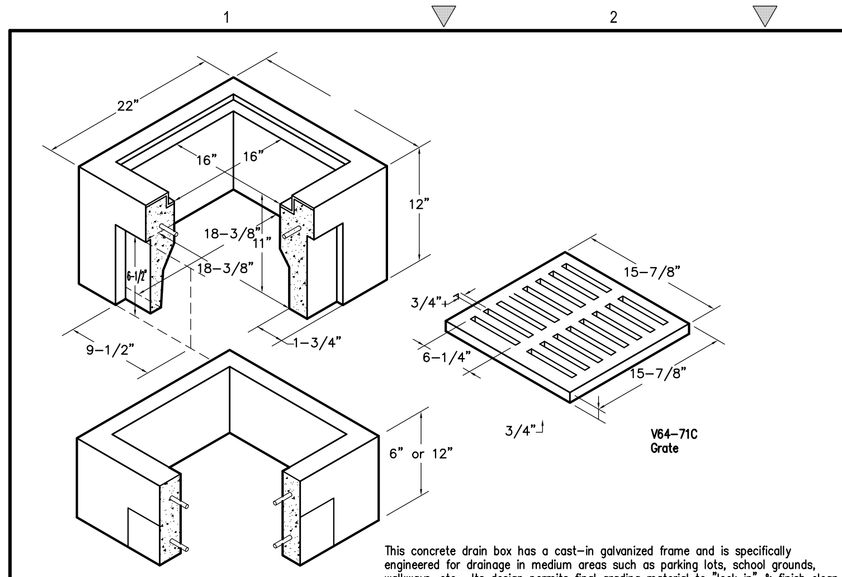

This concrete drain box has a cast-in galvanized frame and is specifically engineered for drainage in medium areas such as parking lots, school grounds, walkways, etc. Its design permits final grading material to "lock in" & finish clean. Knock-outs accommodate up to 8" O.D. pipe. Approximate dimensions shown.

CHRISTY ORDERING CODE	ITEM	DESCRIPTION
V64BOX	Drain Box	V64 Drain Box (18-3/8"x 18-3/8") – 12 per pallet
V64-71C	Grate	Square, Cast Iron
V64X6	Extension	6" Reinforced Concrete – 24 per pallet
V64X12	Extension	12" Reinforced Concrete – 12 per pallet

1 V64 CHRISTY BOX

Scale: NTS

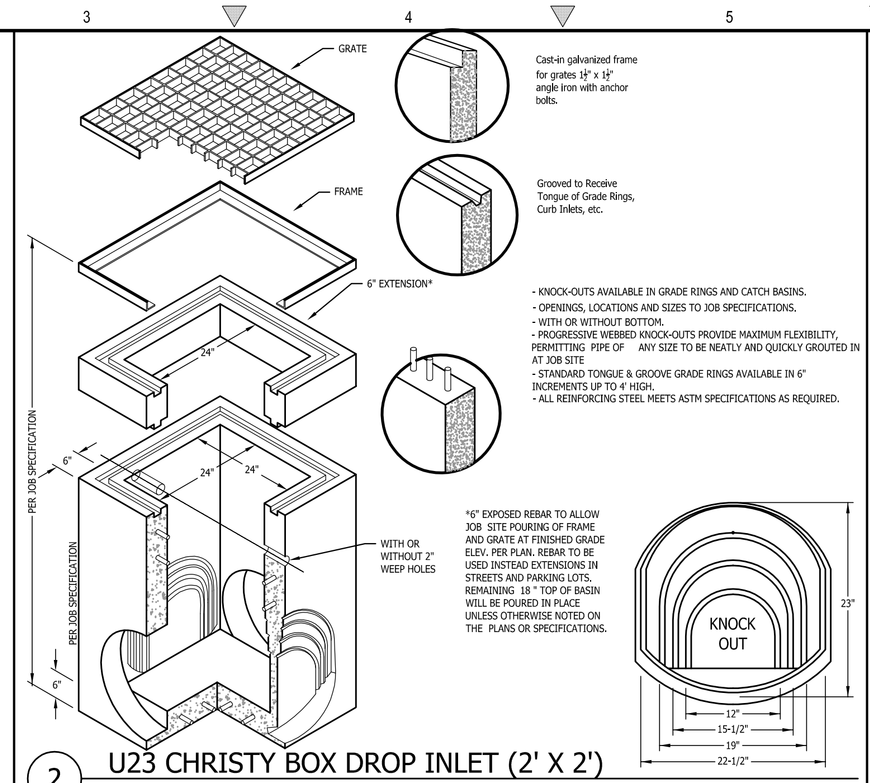

- KNOCK-OUTS AVAILABLE IN GRADE RINGS AND CATCH BASINS.
- OPENINGS, LOCATIONS AND SIZES TO JOB SPECIFICATIONS.
- WITH OR WITHOUT BOTTOM.
- PROGRESSIVE WEBBED KNOCK-OUTS PROVIDE MAXIMUM FLEXIBILITY, PERMITTING PIPE OF ANY SIZE TO BE NEATLY AND QUICKLY GROUTED IN AT JOB SITE
- STANDARD TONGUE & GROOVE GRADE RINGS AVAILABLE IN 6" INCREMENTS UP TO 4' HIGH.
- ALL REINFORCING STEEL MEETS ASTM SPECIFICATIONS AS REQUIRED.

*6" EXPOSED REBAR TO ALLOW JOB SITE POURING OF FRAME AND GRATE AT FINISHED GRADE ELEV. PER PLAN. REBAR TO BE USED INSTEAD EXTENSIONS IN STREETS AND PARKING LOTS. REMAINING 18" TOP OF BASIN WILL BE POURED IN PLACE UNLESS OTHERWISE NOTED ON THE PLANS OR SPECIFICATIONS.

2 U23 CHRISTY BOX DROP INLET (2' X 2')

Scale: NTS

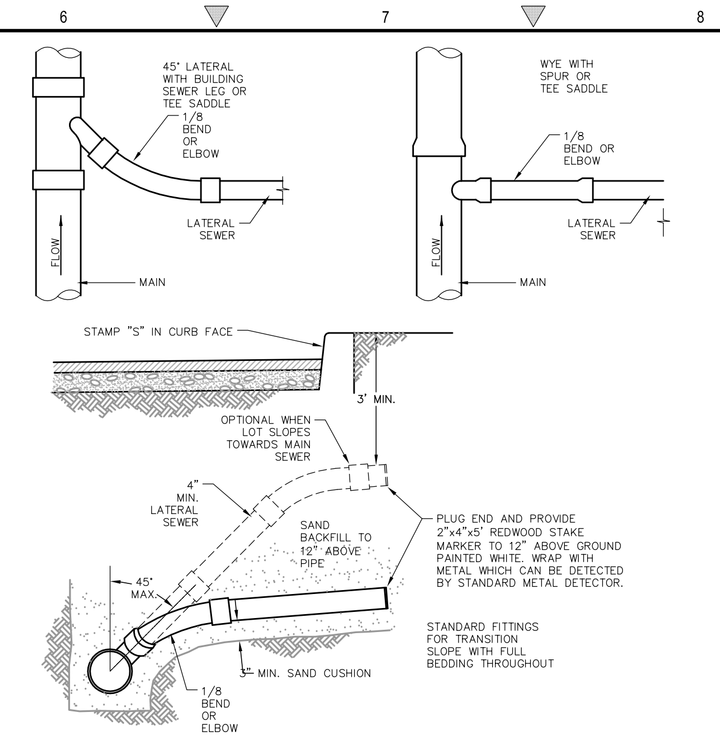

3 SANITARY SEWER LATERAL CONNECTION

Scale: NTS

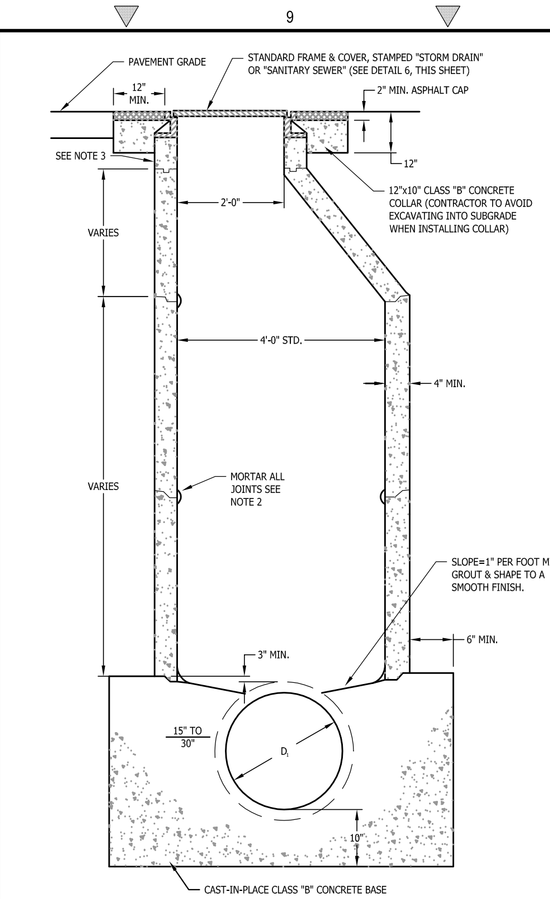

NOTES:

1. PRECAST CONCRETE PIPE SECTIONS, ADJUSTMENT RINGS AND TAPERED SECTIONS SHALL CONFORM TO CLASS II REINFORCED CONCRETE PIPE (ASTM C 76).

2. ALL RAMNECK JOINTS SHALL BE SMOOTHLY FINISHED WITH WATER PROOF MORTAR.

3. THE USE OF MORE THAN 12" OF ADJUSTING RINGS TO CONFORM TO GRADE SHALL NOT BE PERMITTED.

4. CONCENTRIC MANHOLES MAY BE USED WHEN A UTILITY CONFLICT OCCURS OR WHEN APPROVED BY THE CITY ENGINEER.

5. ALL INCOMING LINES TO BE SET TO MATCH CROWNS WITH OTHER PIPES IN MANHOLE, OR AS DIRECTED BY THE CITY ENGINEER.

4 48" PRE CAST STORM DRAIN / SEWER MANHOLE

NTS

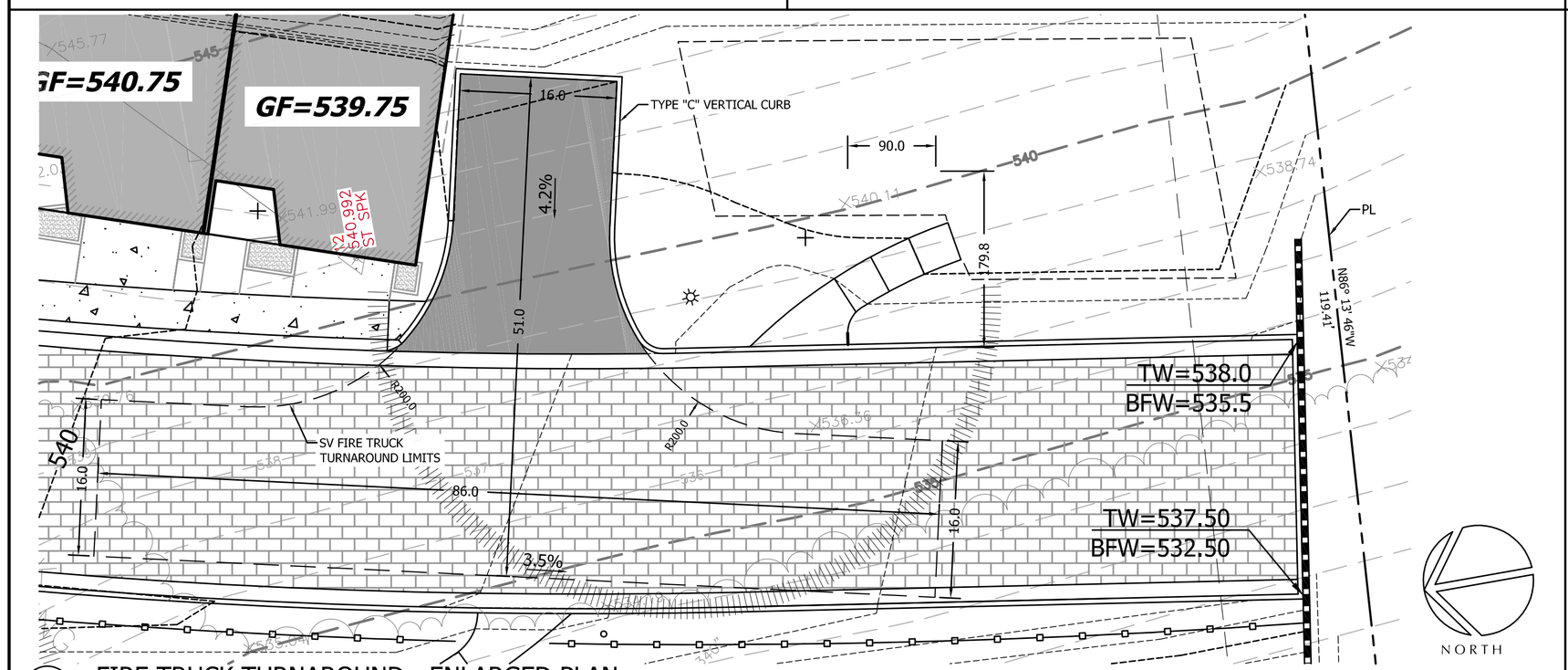

5 FIRE TRUCK TURNAROUND - ENLARGED PLAN

Scale: NTS

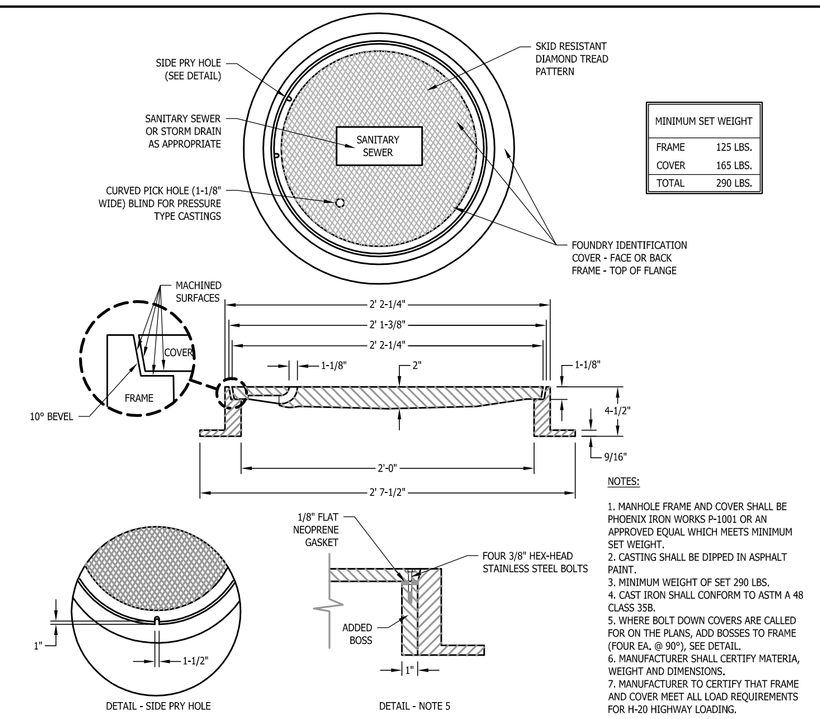

MINIMUM SET WEIGHT	
FRAME	125 LBS.
COVER	165 LBS.
TOTAL	290 LBS.

NOTES:

1. MANHOLE FRAME AND COVER SHALL BE PHOENIX IRON WORKS P-1001 OR AN APPROVED EQUAL WHICH MEETS MINIMUM SET WEIGHT.
2. CASTING SHALL BE DIPPED IN ASPHALT PAINT.
3. MINIMUM WEIGHT OF SET 290 LBS.
4. CAST IRON SHALL CONFORM TO ASTM A 48 CLASS 35B.
5. WHERE BOLT DOWN COVERS ARE CALLED FOR ON THE PLANS, ADD BOSSES TO FRAME (FOUR EA. @ 90°), SEE DETAIL.
6. MANUFACTURER SHALL CERTIFY MATERIA, WEIGHT AND DIMENSIONS.
7. MANUFACTURER TO CERTIFY THAT FRAME AND COVER MEET ALL LOAD REQUIREMENTS FOR H-20 HIGHWAY LOADING.

6 SEWER MANHOLE COVER

Scale: NTS

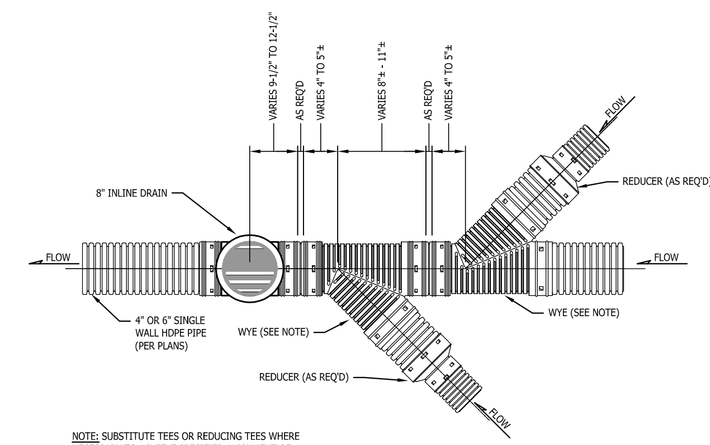

NOTE: SUBSTITUTE TEES OR REDUCING TEES WHERE NECESSARY TO ACHIEVE SPECIFIED ALIGNMENT OF LATERAL.

7 TYPICAL AREA DRAIN MANIFOLD

Scale: NTS

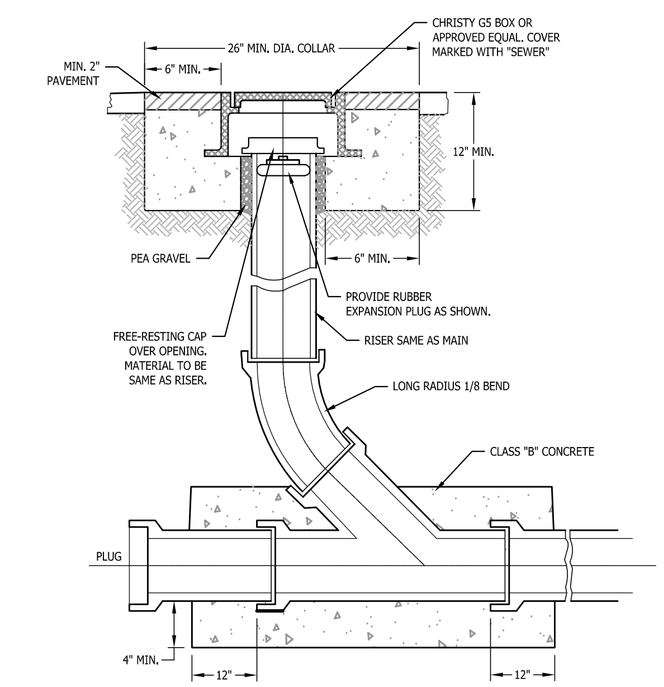

8 SANITARY SEWER CLEAN-OUT

Scale: NTS

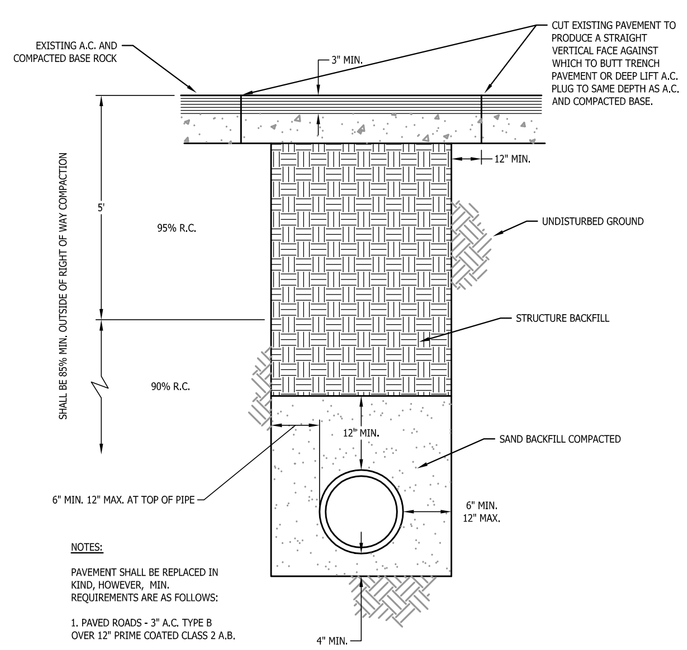

NOTES:

PAVEMENT SHALL BE REPLACED IN KIND, HOWEVER, MIN. REQUIREMENTS ARE AS FOLLOWS:

1. PAVED ROADS - 3" A.C. TYPE B OVER 12" PRIME COATED CLASS 2 A.B.

9 STANDARD TRENCH BACKFILL

Scale: NTS

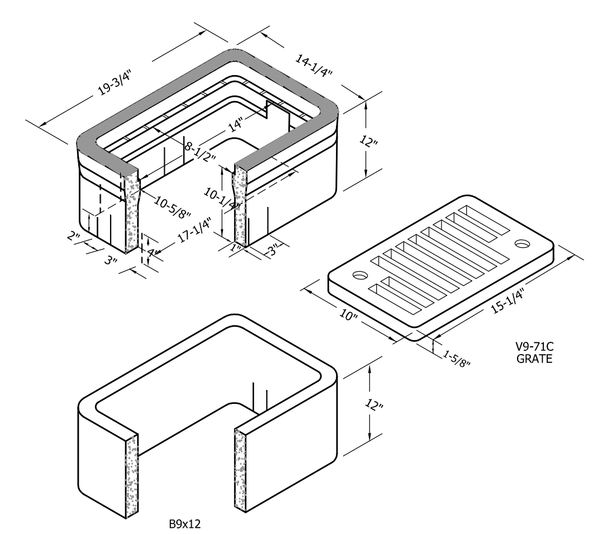

A curb type reinforced concrete box for use in light drainage installations. Approximate dimensions shown. Grates are light duty (Non Traffic).

10 V9 CHRISTY BOX

Scale: NTS

REGISTERED PROFESSIONAL ENGINEER
TODD R. CREAMER
No. C 64561
Exp. 6/30/15
CIVIL
STATE OF CALIFORNIA

W:\249-50 PERRI - SV CORN\CAD\MODELS\SV CORNERS BASE.DWG 8.31.2015

REVISIONS		BY
1	CITY COMMENTS 01.21.2015	DD
2	CITY COMMENTS 07.01.2015	DD

CONSTRUCTION DETAILS

C2G /CIVIL CONSULTANTS GROUP, INC.
Engineers/Planners
444 Airport Blvd. Suite 6
Scotts Valley, CA 95066
T (831) 438-4420 F (831) 438-4420

THE TERRACE AT SCOTTS VALLEY
SCOTTS VALLEY, CA
APN: 022-162-69

Date: 09.09.14
Scale: 1"=10'
Drawn: DD
Job: 249-50
Sheet: C6.3
Of 18 Sheets

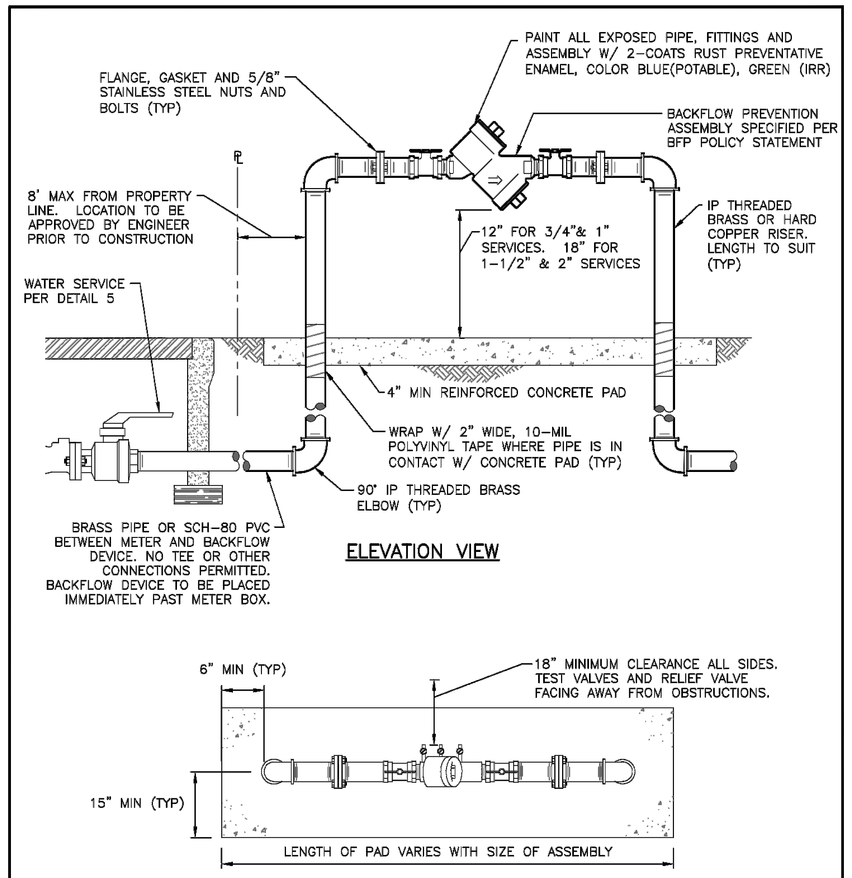

NOTES
1. APPROVED BACKFLOW ASSEMBLY SHALL BE INSTALLED SUCH THAT IT IS READILY ACCESSIBLE FOR REPAIR AND INSPECTION.
2. BRASS FITTINGS, VALVES AND PIPE SHALL CONSIST OF LOW-LEAD BRASS ALLOY AND SHALL HAVE A MINIMUM WORKING PRESSURE OF 150 PSI.
3. BRASS OR PLASTIC PLUGS SHALL BE INSTALLED ON ALL TEST PORTS.
4. ALL ABOVE GROUND PIPE, FITTINGS AND ASSEMBLY SHOULD BE PAINTED WITH TWO COATS OF ENAMEL.
5. AN ENCLOSURE OR CAGE MAY BE INSTALLED AT THE OPTION OF THE PROPERTY OWNER.

SCOTTS VALLEY WATER DISTRICT
WWW.SVWD.ORG
DETAIL 8
2-INCH AND SMALLER BACKFLOW PREVENTION ASSEMBLY INSTALLATION
NOT TO SCALE
RESOLUTION 08-11 APPROVED APRIL 14, 2011

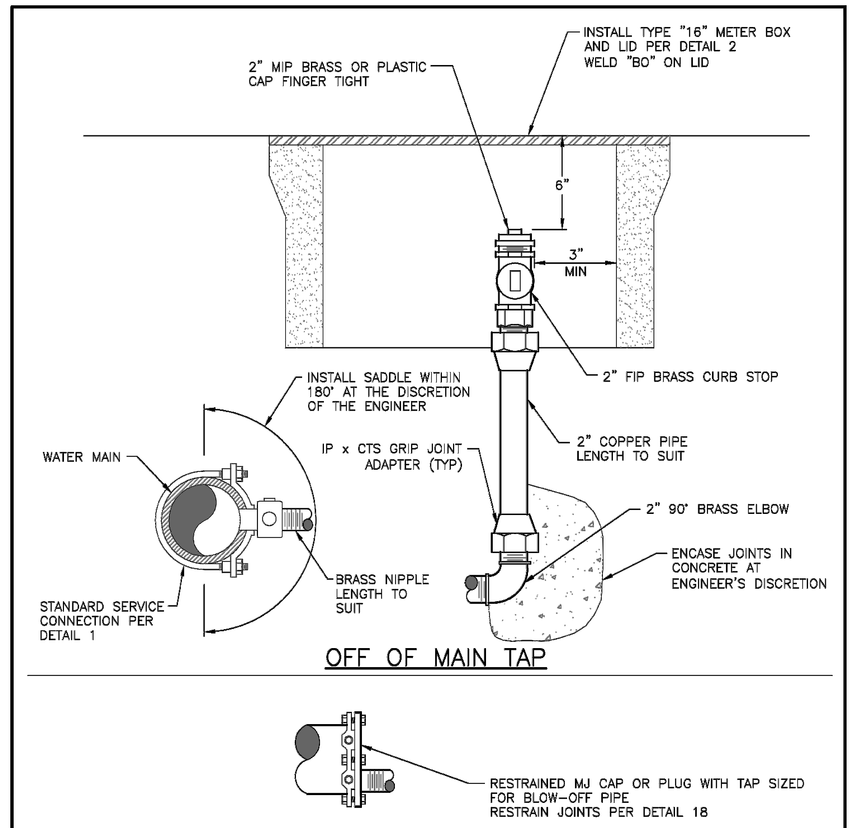

NOTES
1. BLOW-OFF ASSEMBLY MUST BE RESTRAINED, INCLUDING TEMPORARY INSTALLATIONS.
2. MODIFICATIONS MAY BE PERMITTED AT THE DISCRETION OF THE ENGINEER FOR TEMPORARY INSTALLATIONS.
3. BRASS FITTINGS, VALVES AND PIPE SHALL CONSIST OF LOW-LEAD BRASS ALLOY AND SHALL HAVE A MINIMUM WORKING PRESSURE OF 150 PSI.
4. WRAP ALL FITTINGS & PIPE W/ 2" WIDE, 10-MIL PIPE TAPE WHERE IN CONTACT W/ CONC. THRUST BLOCK

SCOTTS VALLEY WATER DISTRICT
WWW.SVWD.ORG
DETAIL 23
BLOW OFF INSTALLATION
NOT TO SCALE
RESOLUTION 08-11 APPROVED APRIL 14, 2011

REGISTERED PROFESSIONAL ENGINEER
TODD R. CREAMER
No. C 64561
Exp. 6/30/15
CIVIL
STATE OF CALIFORNIA

REVISIONS	BY
1 CITY COMMENTS 01.21.2015	DD
2 CITY COMMENTS 07.01.2015	DD

SCOTTS VALLEY WATER DISTRICT
STANDARD DETAILS

C2G /CIVIL CONSULTANTS GROUP, INC.
Engineers/Planners
4444 Scotts Valley Drive / Suite 6
Scotts Valley, CA 95066
T (831) 438-4420 F (831) 438-4420

THE TERRACE AT SCOTTS VALLEY
SCOTTS VALLEY, CA
APN: 022-162-69

Date: 09.09.14
Scale: NTS
Drawn: DD
Job: 249-50
Sheet: C6.4
Of 18 Sheets

W:\249-50 PERRI - SV CORN\CAD\MODELS\SV CORNERS BASE.DWG 8.31.2015

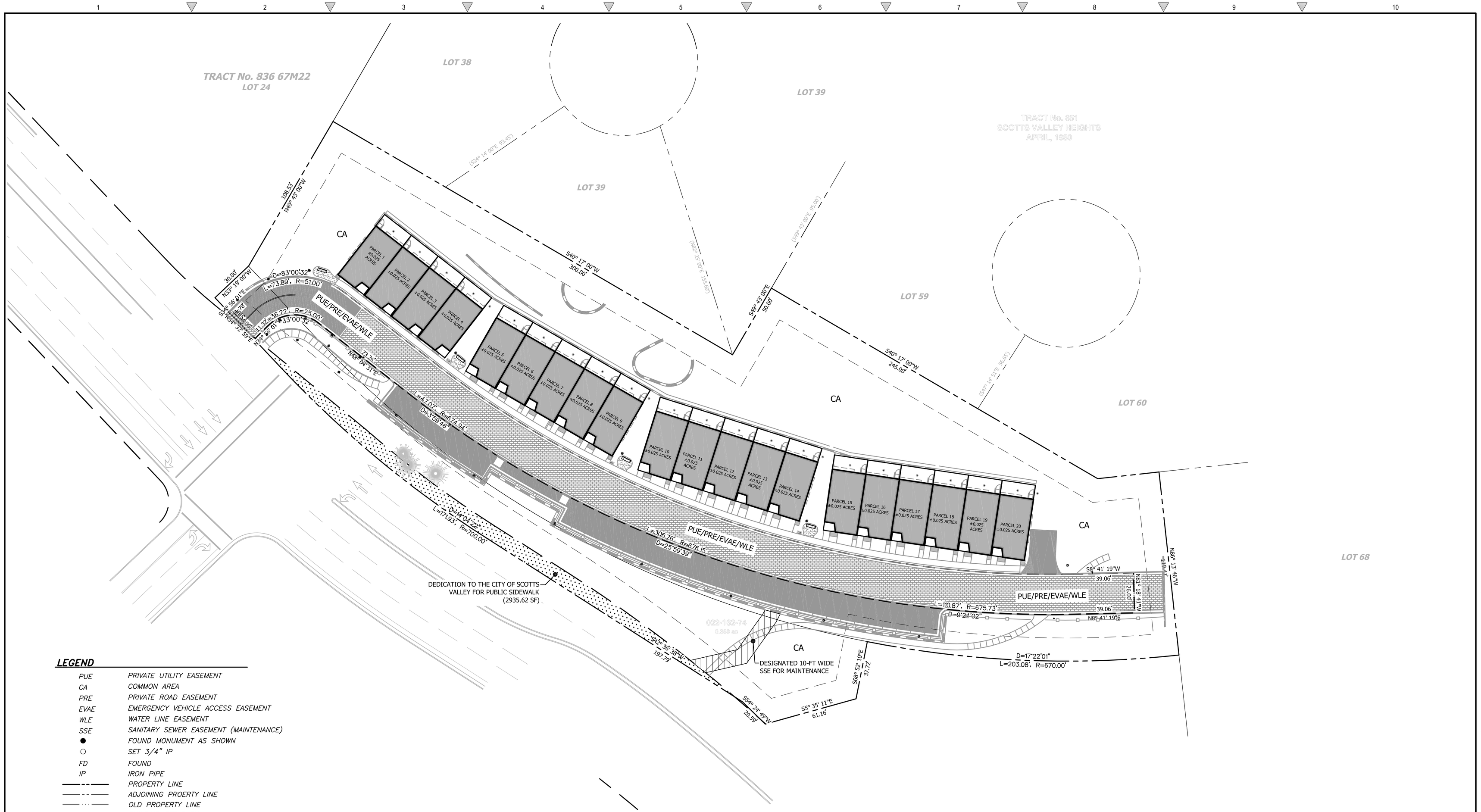

LEGEND

PUE	PRIVATE UTILITY EASEMENT
CA	COMMON AREA
PRE	PRIVATE ROAD EASEMENT
EVAE	EMERGENCY VEHICLE ACCESS EASEMENT
WLE	WATER LINE EASEMENT
SSE	SANITARY SEWER EASEMENT (MAINTENANCE)
●	FOUND MONUMENT AS SHOWN
○	SET 3/4" IP
FD	FOUND
IP	IRON PIPE
———	PROPERTY LINE
—— - - ——	ADJOINING PROERTY LINE
—— · · · ——	OLD PROPERTY LINE
– – – – – –	BUILDING SET BACK
(47°50' 100.00)	CALCULATED BEARING & DISTANCE

BENCHMARK

THE BENCHMARK FOR THIS SURVEY IS SCOTTS VALLEY CITY BENCHMARK #16, WHICH IS A BRASS CAP ON TOP OF A 4' BLOCK RETAINING WALL AT THE SOUTHEASTERLY CORNER OF THE INTERSECTION OF SCOTTS VALLEY DRIVE & QUIEN SABE.

BENCHMARK ELEVATION = 560.403'

NOTES:

1. PROPERTY LINES ARE SHOWN IN FEET & DECIMALS THEREOF; ALL OTHER DIMENSIONS ARE SHOWN IN FEET & INCHES THEREOF.
2. THE DISTINCTIVE BORDER SHOWN THUS INDICATES THE BOUNDARY OF THE LAND SUBDIVIDED BY THIS MAP.

NORTH

GRAPHIC SCALE

20 0 10 20 40 80

(IN FEET)
1 inch = 20 ft.

REGISTERED PROFESSIONAL ENGINEER
TODD R. CREAMER
No. C 64561
Exp. 6/30/15
CIVIL
STATE OF CALIFORNIA

W:\249-50 PERRI - SV CORN\CAD\MODELS\SV CORNERS BASE.DWG 8.31.2015

REVISIONS	BY
1 CITY COMMENTS 01.21.2015	DD
2 CITY COMMENTS 07.01.2015	DD

TENTATIVE MAP

C2G / CIVIL CONSULTANTS GROUP, INC.
Engineers/Planners
4444 Scotts Valley Drive / Suite 6
Scotts Valley, CA 95066
T (831) 438-4420 F (831) 438-4420

THE TERRACE AT SCOTTS VALLEY
SCOTTS VALLEY, CA
APN: 022-162-69

Date: 09.09.14
Scale: nts
Drawn: DD
Job: 249-50
Sheet: C7.1
Of 18 Sheets

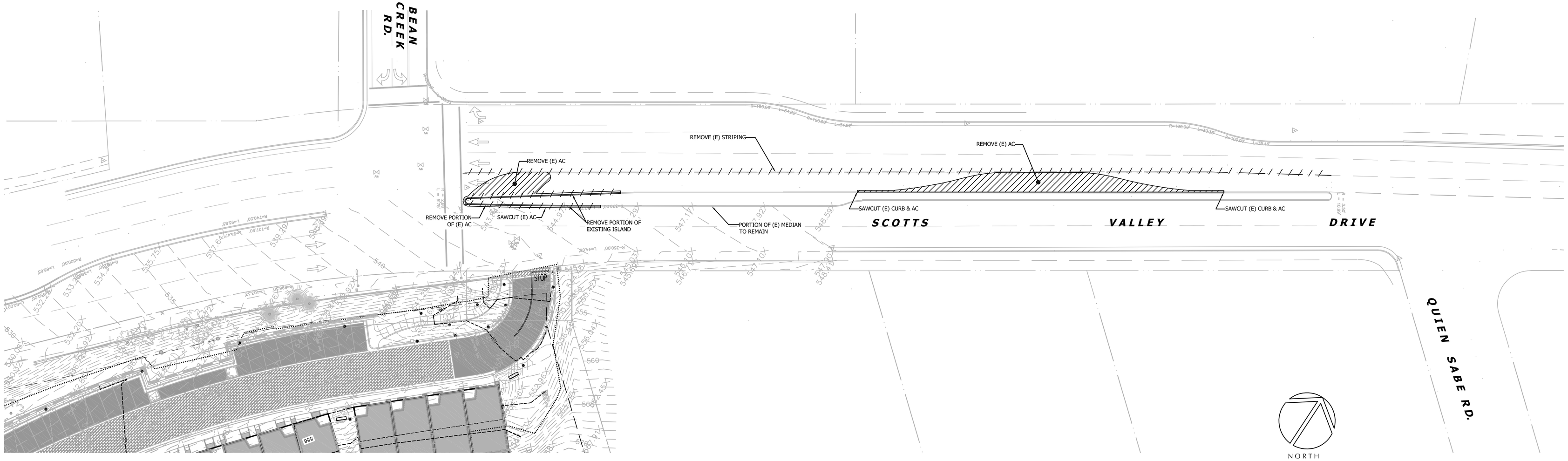

1 OFFSITE DEMOLITION PLAN

Scale: 1:30

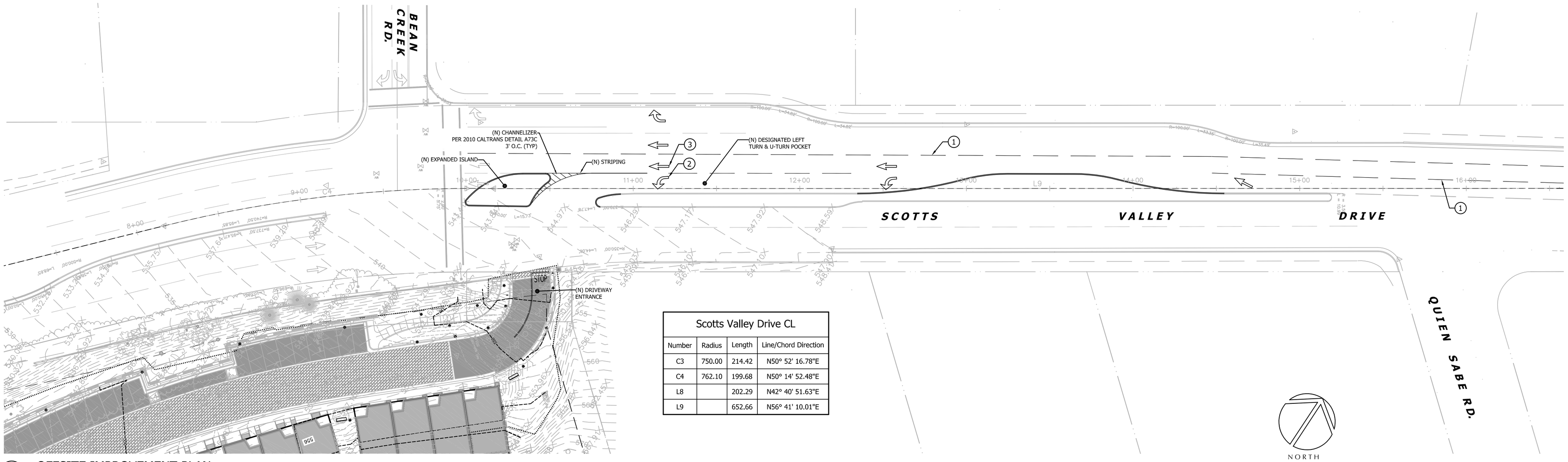

Scotts Valley Drive CL			
Number	Radius	Length	Line/Chord Direction
C3	750.00	214.42	N50° 52' 16.78"E
C4	762.10	199.68	N50° 14' 52.48"E
L8		202.29	N42° 40' 51.63"E
L9		652.66	N56° 41' 10.01"E

2 OFFSITE IMPROVEMENT PLAN

Scale: 1:30

SHEET NOTES

1. (N) DASHED LANE LINE PER DETAIL 8, FIG. 3A-102 (CA) MUTCD
2. PLACE TYPE III (L) ARROW (TYP OF 2)
3. PLACE TYPE I ARROW AS SHOWN (TYP OF 3)

REGISTERED PROFESSIONAL ENGINEER
TODD R. CREMER
No. C 64561
Exp. 6/30/15
CIVIL
STATE OF CALIFORNIA

W:\249-50 PERRI - SV CORN\CAD\MODELS\SV CORNERS BASE.DWG 8.31.2015

REVISIONS	BY
1 CITY COMMENTS 01.21.2015	DD
2 CITY COMMENTS 07.01.2015	DD

TENATIVE OFFSITE LEFT TURN POCKET OPTION (SEE DETAIL 1 SHEET C200)

C2G /CIVIL CONSULTANTS GROUP, INC.
Engineers/Planners
4444 Soquel Drive / Suite 6
Scotts Valley, CA 95066
T (831) 438-4420 F (831) 438-4420

THE TERRACE AT SCOTTS VALLEY
SCOTTS VALLEY, CA
APN: 022-162-69

Date: 09.09.14
Scale: nts
Drawn: DD
Job: 249-50
Sheet: C100
Of 18 Sheets